Vokèra

Mynute 28SE

Room Sealed, Fanned Flue, System Boiler

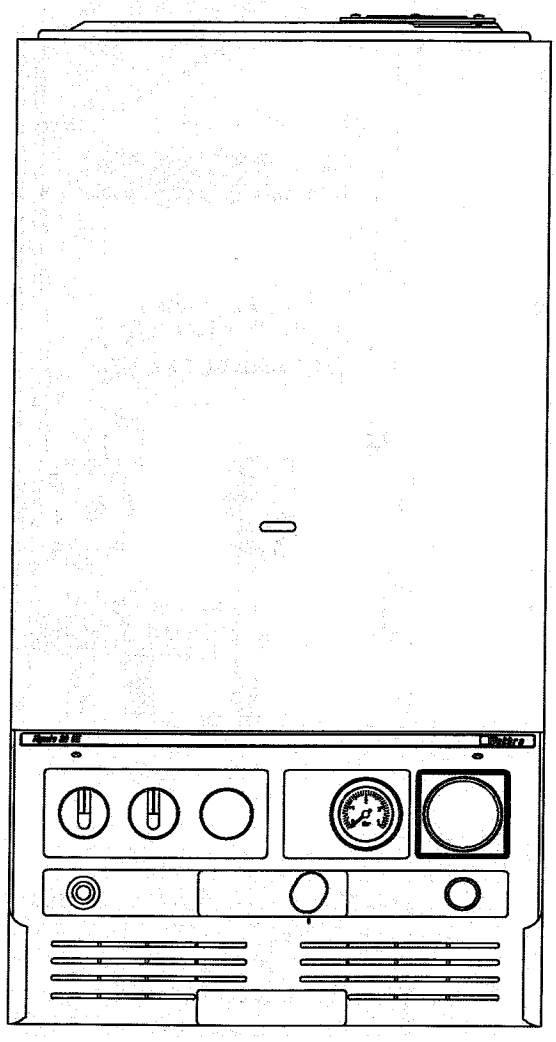

Installation & Servicing Instructions

CE

British Gas Service Listed
G.C. No. 41 094 14

THESE INSTRUCTIONS TO BE RETAINED BY USER

benchmark

The code of practice for the installation, commissioning & servicing of central heating systems

SECTION 1 INTRODUCTION

The Vokèra 28SE Mynute is a central heating boiler which by design incorporates a circulating pump, expansion vessel, safety valve, pressure gauge, automatic by-pass and electronic ignition.

It is produced as a room sealed appliance suitable for wall mounting applications only. It is provided with a fan powered flue outlet with an annular co-axial combustion air intake which can be rotated through 360 degrees. A vertical & twin flue option is available. They are also suitable for S.E. duct installations.

This appliance is designed for use with sealed systems only and is not intended for use on open vented systems.

The provision of stored domestic hot water is possible by the addition of an indirect cylinder with 'Y' or 'S' plan controls.

A range rating facility is incorporated in the boiler.

Fig. 1

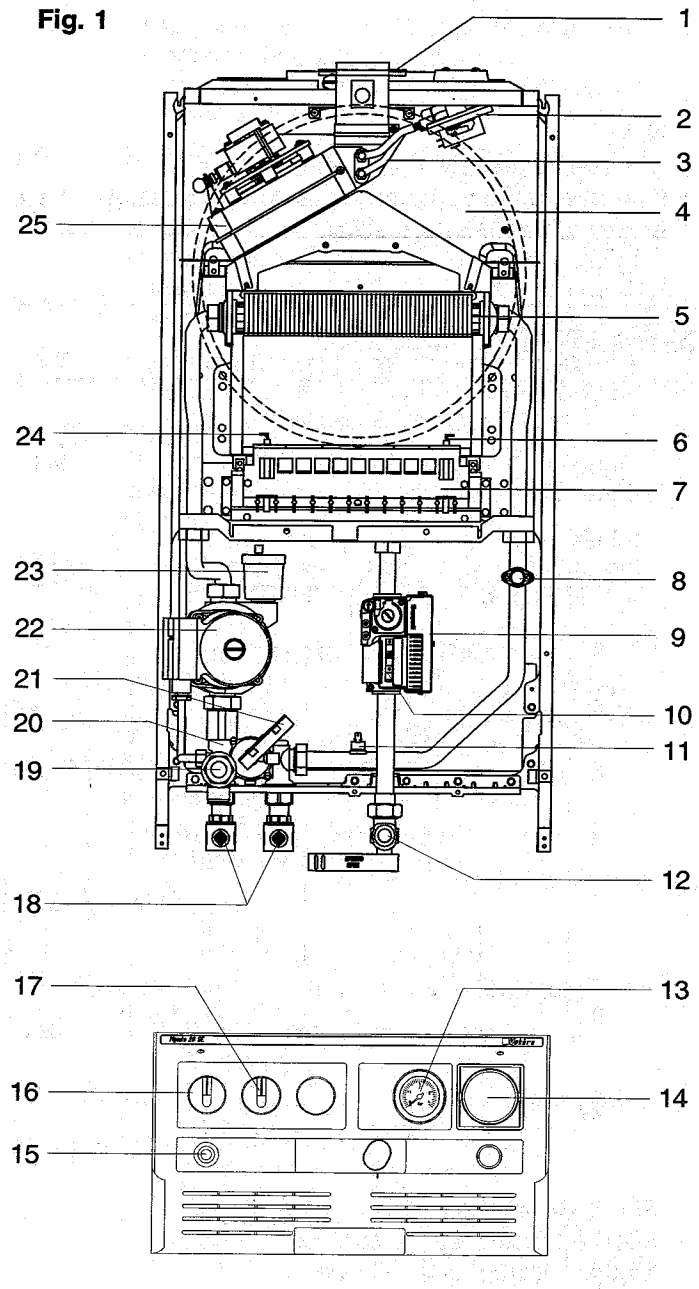

Fig.1 General Layout

1 Flue Restrictor Ring
2 Pressure Differential Switch
3 Silicone Pressure Tubes
4 Expansion Vessel
5 Main Heat Exchanger
6 Spark Electrode
7 Main Burner
8 High Limit Thermostat
9 Electronic Ignition Controller
10 Gas Valve
11 Safety Thermostat
12 Gas Cock
13 Pressure Gauge
14 Time Clock Aperture (optional)
15 Ignition Reset Button
16 Mode Selector Switch
17 Boiler Thermostat
18 Flow & Return Valves
19 Safety Valve
20 Central Heating Manifold
21 Boiler Flow Switch
22 Pump
23 Automatic Air Vent
24 Sensing Electrode
25 Fan

Fig. 2

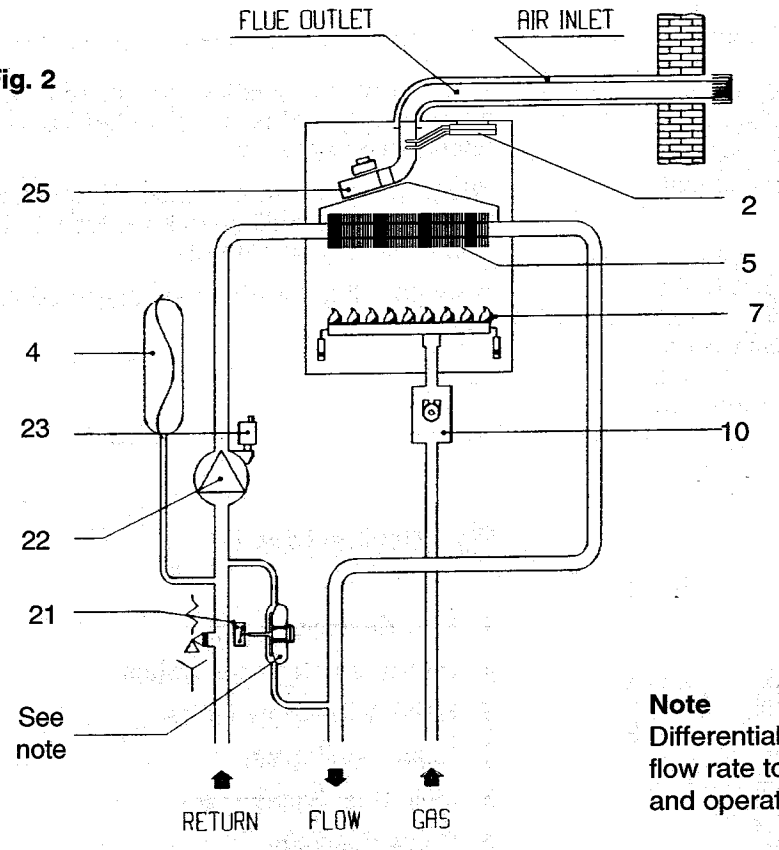

Note
Differential pressure unit senses water flow rate to the pump and main heat exchanger and operates the flow switch.

SECTION 2 DESIGN PRINCIPLES AND OPERATING SEQUENCE

2.1 Fig. 1 illustrates the general layout of components. Fig. 2 illustrates the operating principles described below.

2.2 CENTRAL HEATING

2.2.1 When the various switches and controls impose a demand for heat, the fan and pump are started. The flow of water from the pump operates the water flow switch & the flow of air from the fan operates the air pressure switch. This in turn energises both the gas valve and the electronic ignition circuitry allowing an ignition attempt. The burner ignition is checked by the electronic circuitry and once successful will allow the full rate of gas to flow through the gas valve.

2.2.2 As the water temperature increases this is sensed by the thermostat (17) which eventually operates to switch the burner off.

2.3 SAFETY DEVICES

2.3.1 (A) Differential pressure unit in the circuit which prevents burner operation if the water flow rate is too low.

(B) A high limit thermostat, which interrupts the control circuit shutting off the gas valve.

(C) A safety thermostat which interrupts the control circuit shutting off the gas valve.

2.3.2 A safety valve is provided to relieve excess pressure.

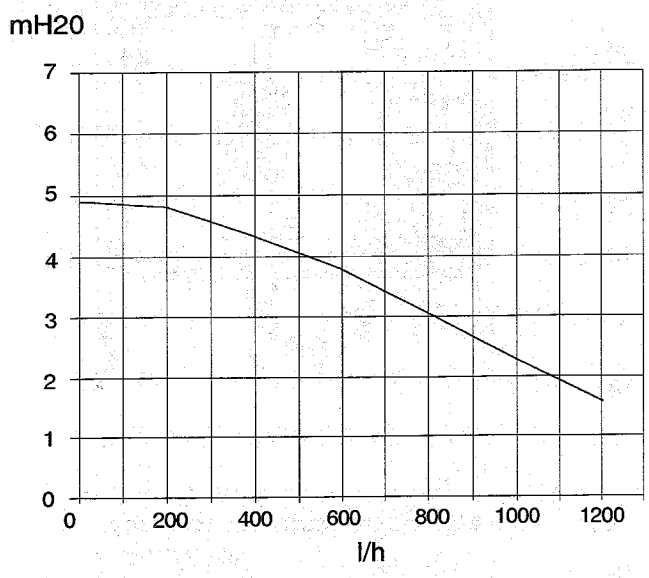

Fig. 3

Fig. 3 shows the residual pump head available for the central heating system after allowing for the pressure loss through the appliance.

SECTION 3 TECHNICAL DATA

3.1 UNITS

Dimensions and values are given in the preferred SI Units with Imperial units in brackets where applicable.

3.2 DIMENSIONS AND CONTENTS

Height: 1035mm (40.8in) overall (840.5mm casing)
Width: 450mm (17.7in)
Depth: 325mm (12.8in)
Weight (empty 40.0kg) (full 42.0kg)
Water content 1.1 litres (0.24 gals)

3.3 CONNECTION SIZES

Heating flow and return: Nut & olive for 22mm o.d.
Gas Service Rc ½ (½in BSP int)
Safety valve outlet: Rc ½ (½ BSP int)

Flue outlet: nom. dia. 60/100mm specially supplied with boiler (concentric)
Flue outlet: nom. dia. 80/80mm specially supplied with boiler (twin)

3.4 INSTALLATION REQUIREMENTS

3.4.1 CLEARANCES

Minimum-above 225mm (9in)(from casing)
Minimum-below 150mm (6in)(from casing)
Minimum-in front 600mm (24in)(from casing)
Minimum-at sides 25mm (1in.)(from casing)

3.4.2 Maximum heating system contents approx. 76.4 litres (16.8 gals) Acceptance capacity of expansion vessel 8 litres (1.76 gals)

3.4.3 Means of filling sealed system: To accord with BS and/or local Water Authority requirements.

3.4.4 The standard concentric horizontal flue duct assembly allows a maximum length of duct as follows:
Rear flue: 731mm (Wall thickness)
Side flue: 890mm (to centre line of boiler)

Using extension tubes the flue may be extended to:

Concentric
3.4 metres max. (horizontal).
4.4 metres max. (vertical).

Twin
14/14 metres max. (horizontal).
14/14 metres max. (vertical)
Plus the concentric vertical or horizontal terminal.

The reduction in flue length for each bend used is listed in the chart.

CONCENTRIC FLUE

BEND	REDUCTION IN FLUE LENGTH FOR EACH BEND
45°	0.5 m
90°	1.0 m

TWIN FLUE

BEND	REDUCTION IN FLUE LENGTH FOR EACH BEND
45°	1.0 m
90°	1.0 m

3.5 ELECTRICAL DETAILS

Mains supply 230v ~ 50Hz Fused 3A Power consumption: 125W

3.6 PERFORMANCE

Central Heating
Nominal Heat Input
Max. 31kW (105,800Btu/h)(net)
Min. 22.3kW (76,100Btu/h)(net)
Max. 34kW (116,040Btu/h)(gross)
Min. 24.7kW (84,300Btu/h)(gross)
Designed temperature rise 20°C

Nominal Heat Output
Max. 28.0kW (95,563 Btu/h)
Min. 19.8kW (67,576 Btu/h)
Max. flow temperature 85°C

Max. Gas Pressure 11.0 mbar
Min. Gas Pressure 5.5 mbar
Soft Light Gas Pressure 4.0 mbar

Max. Gas Rate 3.28m3/h
Min. Gas Rate 2.38m3/h

Working Pressures Heating System
Maximum 1.5bar
Minimum 0.5bar
Safety valve setting 3bar

3.7 BURNER DETAILS

Main Burner: Polidoro type NP14
Main burner injectors 14 x 1.30

NOTE: Use gross input values when gas rating the appliance.

For L.P.G instructions see pages 45-46

4.0 GENERAL REQUIREMENTS

This appliance must be installed by a competent person in accordance with the Gas Safety (Installation and Use) Regulations 1998.

4.1 RELATED DOCUMENTS

The installation of this boiler must be in accordance with the relevant requirements of the Gas Safety (Installation and Use) Regulations 1998, the Local Building Regulations, the current I.E.E. Wiring Regulations, the bylaws of the local water undertaking, and in Scotland, in accordance with the Building Standards (Scotland) Regulation. In Ireland the local building regulations (IE).

It should be in accordance also with any relevant requirements of the local authority and the relevant recommendations of the following British Standard Codes of Practice:

BS 6891		1988	Low pressure installation pipes
BS 6798		1987	Boilers of rated input not exceeding 60kW.
BS 5449		1990	Forced circulation hot water systems
BS 5440	Part 1	1990	Flues

4.2 LOCATION OF APPLIANCE

This boiler may be installed in any room or internal space, although particular attention is drawn to the requirements of the current I.E.E. Wiring Regulations, and in Scotland, the electrical provisions of the Building Regulations applicable in Scotland, with respect to the installation of the boilers in a room or internal space containing a bath or shower.

Where a room-sealed appliance is installed in a room containing a bath or shower, any electrical switch or appliance control utilising mains electricity should be located in such a position that it cannot be touched by a person using the bath or shower.

The location chosen for a boiler must permit the provision of a satisfactory flue and termination. The location must also permit an adequate air supply for combustion purposes and an adequate space for servicing and air circulation around the boiler. Where the installation of the boiler will be in an unusual location special procedures may be necessary and BS 6798:1987 gives detailed guidance on this aspect.

A compartment used to enclose a boiler must be designed and constructed specifically for this purpose. An existing cupboard or compartment may be used provided that it is modified for this purpose.

Details of essential features of cupboard/compartment design including airing cupboard installations are given in BS 6798: 1987. These appliances are not suitable for external installation.

4.3 GAS SUPPLY

A gas meter is connected to the service pipe by the local gas supplier. An existing meter should be checked, preferably by the gas supplier to ensure that the meter is adequate to deal with the rate of gas supply required for all appliances it serves. Installation pipes should be fitted in accordance with BS 6891.

Pipework from the meter to the boiler must be of adequate size. Pipes of a smaller size than the boiler inlet connection should not be used.

The complete installation must be tested for soundness as described in the above code.

N.B. If the gas supply for the boiler serves other appliances ensure that an adequate supply is available both to the boiler and the other appliance(s) when they are in use at the same time.

4.4 FLUE SYSTEM

The terminal should be located where dispersal of combustion products is not impeded and with due regard for the damage or discoloration that might occur to building products in the vicinity (see fig 4).

The terminal must not be located in a place where it is likely to cause a nuisance.

In cold and/or humid weather water vapour may condense on leaving the flue terminal. The effect of such steaming must be considered.

For protection of combustibles, refer to BS 5440:1 where the terminal is less than 2m (6.6ft) above a pavement or platform to which people have access (including any balcony or flat roof) the terminal must be protected by a guard of durable material.

A suitable guard is available from Vokèra Ltd. Part No 018, (GC No 301 106). This guard must be fitted centrally over the terminal.

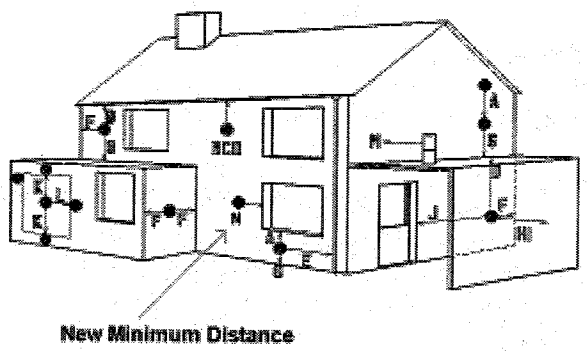

Fig. 4

Terminal position for fan assisted boiler

(minimum distance)			mm
A	-	Directly below an open window or other opening (e.g. air brick)	300
B	-	Below gutters, soil pipes or drain pipes	25
C	-	Below eaves	25
D	-	Below balconies or car port roof	25
E	-	From vertical drain pipes and soil pipes	75
F	-	From internal or external corners	25
G	-	Above ground or below balcony level	300
H	-	From a surface facing a terminal	600
I	-	From a terminal facing a terminal	1200
J	-	From an opening in the car port (e.g. door window) into dwelling.	1200
K	-	Vertically from a terminal on the same wall	1500
L	-	Horizontally from a terminal on the same wall	300
M	-	Horizontally from a vertical terminal to a wall	300
N	-	Horizontally from an opening, airbrick, openable window, etc.	300

NOTE: The flue must be terminated in a place not likely to cause a nuisance.

4.5 AIR SUPPLY

The following notes are intended for general guidance.

The room sealed fan flued boiler does not require a permanent air vent for combustion air supply.

Where installed in a cupboard or compartment ventilation for cooling purposes is not required.

4.6 WATER CIRCULATION

4.6.1 Detailed recommendations are given in BS 6798:1987 and BS 5449:1990 (for smallbore and microbore central heating systems). The following notes are given for general guidance.

4.6.2 PIPEWORK

Copper tubing to BS 2871:1:1971 is recommended for water pipe. Jointing should be either by capillary soldered or with compression fittings.

Where possible, pipes should have a gradient to ensure air is carried naturally to air release points and water flows naturally to drain taps.

It should be ensured as far as possible that the appliance heat exchanger is not a natural collecting point for air.

Except where providing useful heat, pipes should be insulated to prevent heat loss and to avoid freezing. Particular attention should be paid to pipes passing through ventilated spaces in roofs and under floors.

4.6.3 BY-PASS

An automatic by-pass is incorporated in the boiler and systems should be designed to ensure that with only one radiator turned on a flow rate of at least 350 litres/hour (1.28 gals/min) is achieved through the boiler. See clause 6.9.4.

4.6.4 SYSTEM DESIGN

Fig 5 illustrates typical heating only layout, but the boiler is also suitable for installation with a 'Y'or 'S' plan system.

Figures 7 & 8 illustrate layouts.

Section 10 appendix C gives wiring details.

4.6.5 DRAINING TAPS

These must be located in accessable positions to permit the draining of the whole system. The taps must be at least 15mm nominal size and manufactured in accordance with BS 2879:1980.

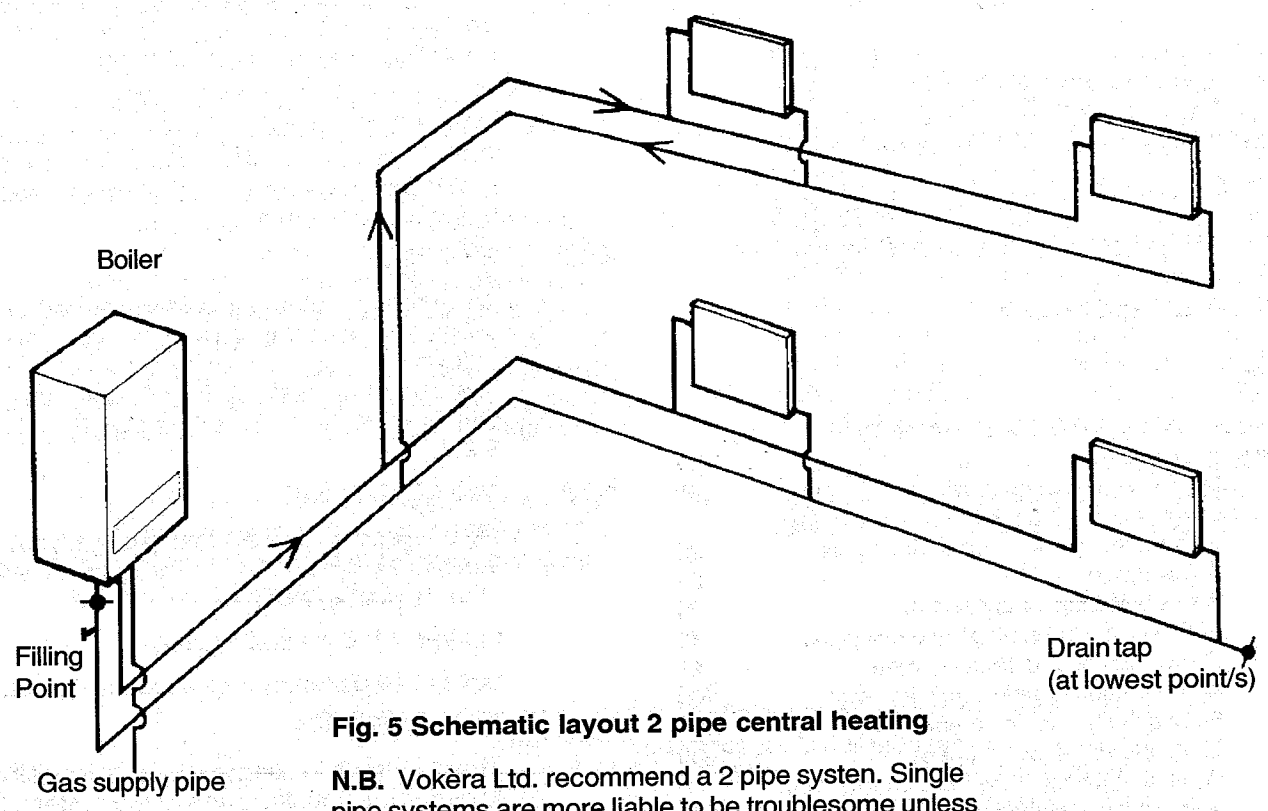

Fig. 5 Schematic layout 2 pipe central heating

N.B. Vokèra Ltd. recommend a 2 pipe systen. Single pipe systems are more liable to be troublesome unless carefully designed and installed.

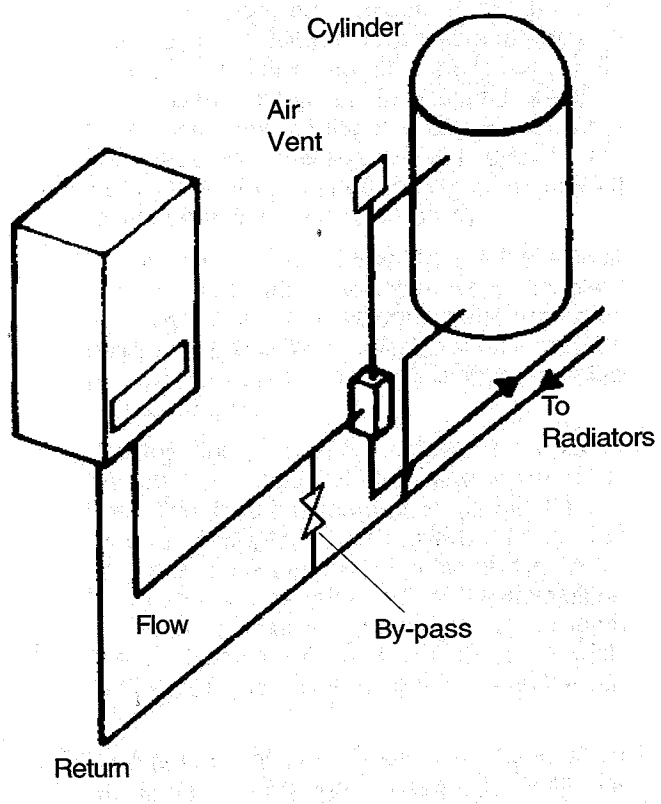

Fig. 7 Schematic 'Y' Plan

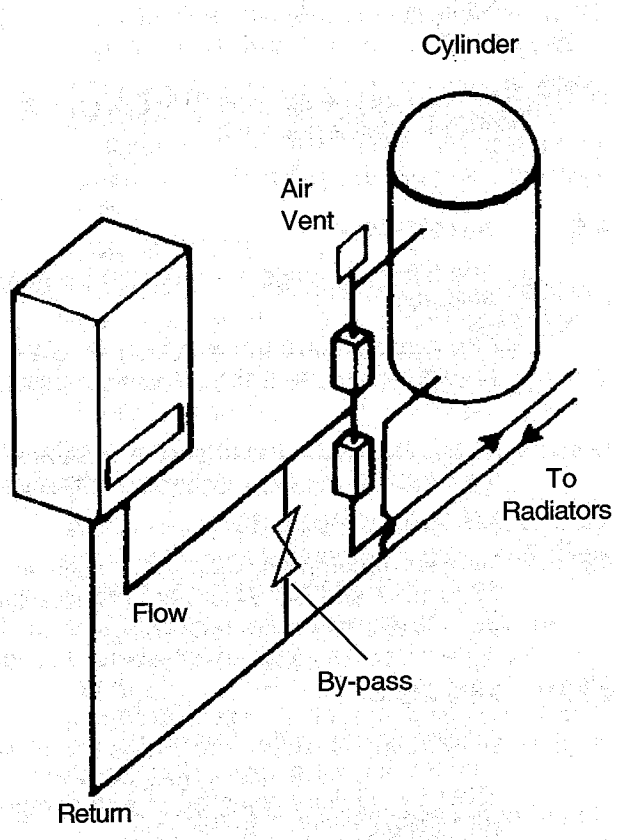

Fig. 8 Schematic 'S' Plan

4.6.6 AIR RELEASE POINT

These must be fitted at all high points where air will naturally collect, and must be sited to facilitate complete filling of the system.

4.6.7 EXPANSION VESSEL

The appliance has an integral sealed expansion vessel to accommodate the increase of water volume when the system is heated. It can accept up to 8 litres (1.76 gals) of expansion water.

If the appliance is connected to a system with an unusually high water content, calculate the total expansion and add additional sealed expansion capacity as appropriate.

In general, modern systems will present no problem.

4.6.8 FILLING POINT

A method for initially filling the system and replacing water lost during servicing must be provided, and it must comply with local water authority regulations. A method is shown in fig. 9 using the Vokèra filling loop which is acceptable in most areas. In the event that this method is not suitable in a particular area, contact the local authority for preferred methods.

4.7 ELECTRICAL SUPPLY

The appliance is supplied for operation on 230V ~50Hz electricity supply. It should be protected with a 3-amp fuse.

THIS APPLIANCE MUST BE EARTHED.

The method of connection to the mains electricity must allow complete isolation from the supply.

The preferred method is by using a fused double pole switch with a contact separation of at least 3mm.

The switch must supply ONLY the appliance and immediate electrical control circuits (e.g. programmer/room thermostat)

Alternatively, use an unswitched shuttered socket outlet with a fused 3- pin plug both complying with BS 1363.

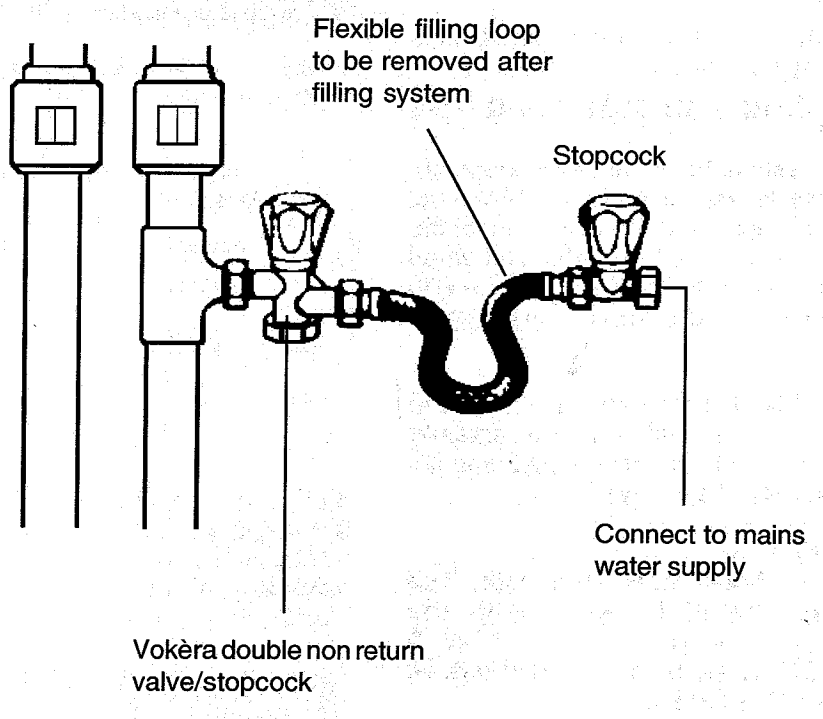

Fig. 9

5.1 DELIVERY

The appliance is delivered in a heavy duty cardboard carton. A template is printed on one side of the carton. This should be carefully cut out and used prior to installation to mark the locations for fixing holes for the upper bracket and the flue.

Packed with the boiler are:
1 - Hanging bracket
1 - Fittings pack containing:
2 x Central heating valves
1 x Gas service tap
2 x Fibre washers
1 - Installation Manual.
1 - Users Instructions

5.2 UNPACKING

5.2.1 Open the top of the carton and remove accessories and top packing.

5.2.2 Lay the carton with the words 'truck here' on the floor, restrain the carton, grip the back frame (not the flue or casing) and withdraw the appliance.

5.3 PREPARING FOR MOUNTING

5.3.1 Remove the 2 screws securing the lower control panel to the upper outer casing.(Fig.10)

5.3.2 Lower the control panel, disengage the outer casing from the 2 locating pins at the bottom left and bottom right corners by pulling the casing forwards. Slightly lift the casing to disengage from the top suspension hooks.

5.3.3 Ensure the casing and screws are put to one side in a safe place.

5.3.4 Loosely fit (hand tight) the valves and fittings using the washers supplied (Fig.10a).

5.4 PREPARATION FOR MOUNTING THE APPLIANCE

The appliance should be mounted on a smooth, non-combustible, vertical surface, which must be capable of supporting the full weight of the appliance. Care should be exercised when determining the position of the appliance with respect to hidden obstructions such as pipes, cables, etc.

When the position of the appliance has been decided – using the template supplied – carefully mark the position of the wall bracket (see fig. 11) and flue-hole (if applicable).

5.4.1 **IMPORTANT**
There are two holes on the template. The lower hole should be used with the telescopic flue kit (part no. 0225705 & 0225710). The upper hole is for use with all other horizontal flue kits.

Fig.10

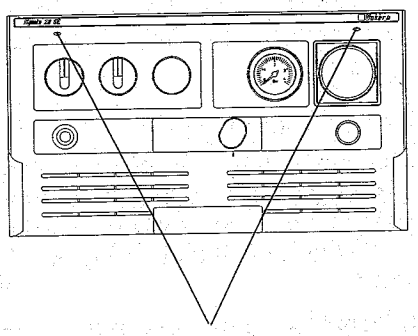

Fig.10a

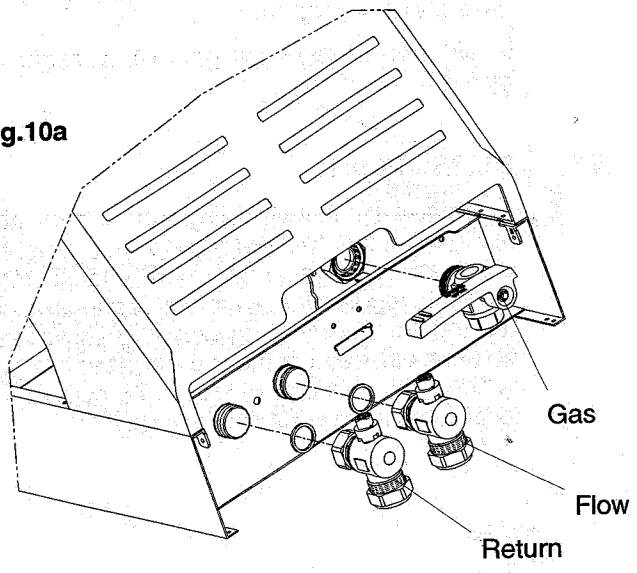

1 = centre of rear flue hole using ONLY 0225705 or 0225710 flue
2 = centre of rear flue hole for ALL OTHER FLUES

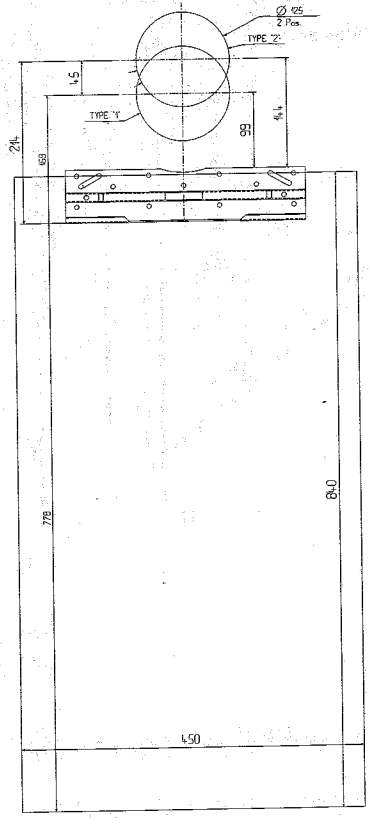

Fig. 11

5.4.2 Maximum flue lengths

Flue system	Mynute 28SE
Concentric Horizontal	3.4m
Concentric Vertical	4.4m
Twin flue	14m/14m + terminal

5.5 FITTING THE FLUE

The top flue outlet permits both horizontal and vertical flue applications to be considered, alternatively, the Vokera twin flue system can be utilised if longer flue runs are required.

5.5.1 CONCENTRIC HORIZONTAL FLUE

(For concentric vertical flue, see 5.5.2)
(For twin flue applications, see 5.5.3)
The appliance flue outlet elbow can be rotated through 360° on its vertical axis. In addition the flue may be extended from the outlet elbow in the horizontal plane (see 5.4.2), however if the flue is to be extended or additional bends are to be fitted, the standard horizontal flue kit (part no. 2359029) **must** be used. A reduction must also be made to the maximum length (see table) when additional bends are used.

Reduction for bends

Bend	Reduction in maximum flue length for each bend
45° bend	0.5 Metre
90° bend	1.0 Metre

Horizontal flue terminals and accessories

Part No.	Description	Min-Max Length
0225705	Standard telescopic flue	380mm – 600mm (Dimension 'X')
0225710	Extended telescopic flue	600mm – 920mm (Dimension 'X')
2359029	Horizontal flue kit For use with add. Bends & extensions	833mm (dimension 'X')
2359069	750mm extension	750mm
2359079	1500mm extension	1500mm
2359049	45° bend (pair)	N/A
2359059	90° bend	N/A
0225760	Wall bracket (5)	N/A

Using the template provided (see 5.4.1), mark and drill a 125mm hole for the passage of the flue pipe. The hole should have a 1° drop from the boiler to outside, to eliminate the possibility of rainwater entering the appliance via the flue.

The fixing holes for the wall-mounting bracket should now be drilled and plugged, an appropriate type and quantity of fixing should be used to ensure that the bracket is mounted securely. Once the bracket has been secured to the wall, mount the appliance onto the bracket.

FITTING THE TELESCOPIC FLUE KIT (0225705 & 0225710)

Carefully measure the distance from the centre of the appliance flue outlet to the face of the outside wall (dimension 'X' see fig. 12). Add 50mm to dimension 'X' to give the overall flue length (dimension 'Y'). Using the complete telescopic flue assembly adjust the length to suit dimension 'Y'. Once the telescopic flue terminal has been adjusted to the correct length, secure the flue assembly with the screw supplied.

NOTE
The flue restrictor ring (see fig. 1) must be removed or discarded prior to attaching the flue bend to the appliance.

Insert the flue assembly into the previously drilled flue hole and locate the flue bend over the appliance flue outlet. Push the flue bend down over the appliance flue outlet and ensure the correct seal is made. Pull the flue assembly towards and over the flue bend – using a twisting action – ensuring the correct seal is made. Check that the terminal protrudes past the finished outside wall by the correct length (115mm).

NOTE
You must ensure that the entire flue system is properly supported and connected.

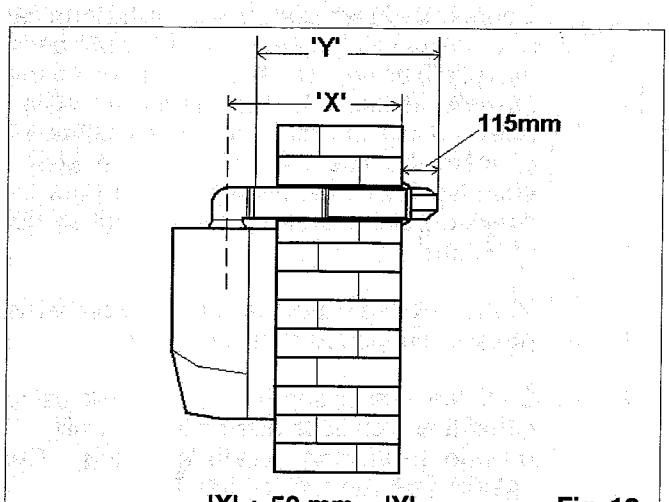

'X' + 50 mm = 'Y' **Fig. 12**

Seal the flue assembly to the wall using cement or a suitable alternative that will provide satisfactory weatherproofing. The interior and exterior trim can now be fitted.

FITTING THE STANDARD (2359029) HORIZONTAL FLUE KIT (see 5.4.1)

Carefully measure the distance from the centre of the appliance flue outlet to the face of the outside wall (dimension 'X' see fig. 13). Ensure the inner (60mm) pipe is fully inserted into the outer (100mm) pipe (when the inner pipe is fully inserted, it stands proud of the outer pipe by 7.5mm). Add 32mm to dimension 'X' to give

the overall flue length (dimension 'Y'). The standard horizontal flue kit (part no. 2359029) is suitable for a distance (dimension 'Y') of up to 865mm.

NOTE
Dimension 'Y' is measured from the end of the terminal to the end of the outer (100mm) pipe. The internal trim should be fitted to the flue pipe before connection of the 90° bend.

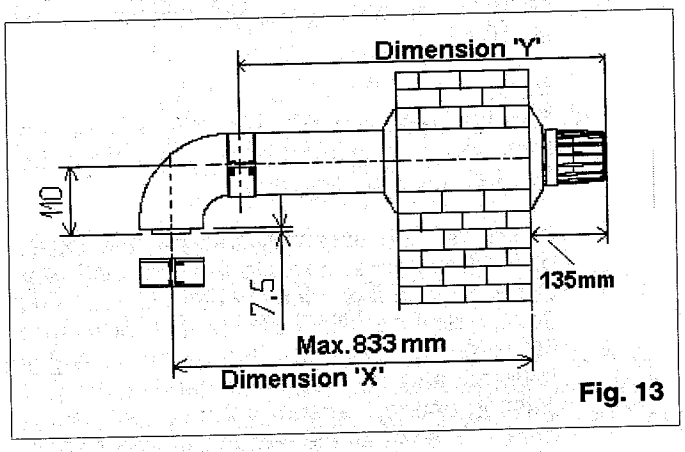

Fig. 13

If the horizontal flue kit (2359029) requires to be cut to the correct size (dimension 'Y'), you must ensure that the inner (60mm) pipe stands proud of the outer (100mm) pipe by 7.5mm (see fig. 13A). Ensure any burrs are filed or removed and that any seals are located properly before assembly.

Connect the inner (60mm) pipe of the terminal assembly to the push-fit end of the 90° bend (supplied) using a twisting action. Insert the assembled flue into the previously drilled hole. Using the clips & screws supplied, connect the flue assembly to the boiler, ensuring that the terminal protrudes past the finished outside wall by the correct length (135mm).

You must ensure that the entire flue system is properly supported and connected.

Seal the flue assembly to the wall using cement or a suitable alternative that will provide satisfactory weatherproofing. The exterior trim can now be fitted.

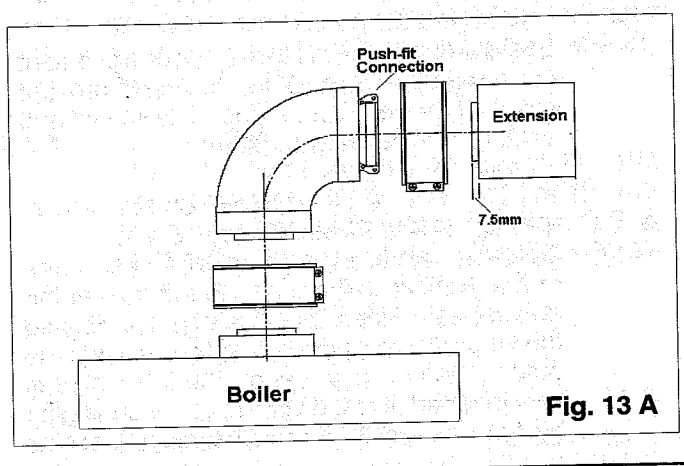

Fig. 13 A

EXTENDING THE HORIZONTAL FLUE
If the horizontal flue requires extension/s or additional bend/s, the horizontal flue terminal kit (2359029) must be used. Connect the bend – supplied with the terminal kit – to the top of the boiler using the clips, screws, & gaskets supplied. The additional bends & extensions have an internal push-fit connection, care should be taken to ensure that the correct seal is made when assembling the flue system. Connect the required number of flue extensions or bends (up to the maximum equivalent flue length) to the flue terminal using the clips, screws, & gaskets supplied (see fig. 13 & 13A).

IMPORTANT
The flue restrictor ring (see fig. 1) must be removed or discarded if the total flue length – including bends – exceeds 1.0m.

NOTE
When cutting the horizontal flue terminal or an extension to the required length, you must ensure that the excess is cut from the plain end of the terminal or extension, and that the inner (60mm) pipe is 7.5mm longer than outer (100mm) pipe (see fig. 13 & 13A). Remove any burrs, and check that any seals are located properly.

You must ensure that the entire flue system is properly supported and connected.
Seal the flue assembly to the wall using cement or a suitable alternative that will provide satisfactory weatherproofing. The interior and exterior trim can now be fitted.

5.5.2 CONCENTRIC VERTICAL FLUE

The vertical flue terminal can be connected directly to the appliance flue outlet. Alternatively, an extension or bend can be connected to the appliance flue outlet if desired (see 5.4.2), however if additional bends are fitted, a reduction must be made to the maximum flue length (see table below).

Reduction for bends

Bend	Reduction in maximum flue length for each bend
45° bend	0.5 Metre
90° bend	1.0 Metre

Vertical flue terminal and accessories

Part No.	Description	Length
2359039	Vertical flue terminal	1.0 metre
0225770	Pitched roof flashing plate	N/A
0225765	Flat roof flashing plate	N/A
2359069	750mm extension	750mm
2359079	1500mm extension	1500mm
2359049	45° bend (pair)	N/A
2359059	90° bend	N/A
0225760	Wall bracket (5)	N/A

Using the dimensions given in fig. 14 as a reference, mark and cut a 105mm hole in the ceiling and/or roof.

Fit the appropriate flashing plate to the roof and insert the vertical flue terminal through the flashing plate from the outside, ensuring that the collar on the flue terminal fits over the flashing.

The fixing holes for the wall-mounting bracket should now be drilled and plugged, an appropriate type and quantity of fixing should be used to ensure that the bracket is mounted securely. Once the bracket has been secured to the wall, mount the appliance onto the bracket.

IMPORTANT

The vertical flue terminal is 1.0 metre in length and cannot be cut; therefore it may be necessary to adjust the height of the appliance to suit or use a suitable extension.

Remove or discard the flue restrictor ring from the appliance flue outlet (see fig. 1), if the total flue length – including the allowance for any additional bends – exceeds 1.0 metre.

Connect the vertical flue assembly to the boiler flue spigot using the 60mm & 100mm clips, gaskets, & screws (supplied), ensuring the correct seal is made. The flue support bracket (supplied with the vertical flue kit) can now be fitted.

If the vertical flue requires extension/s or additional bend/s, connect the required number of flue extensions or bends (up to the maximum equivalent flue length) between the boiler and vertical flue assembly (see fig. 13A).

NOTE

When cutting an extension to the required length, you must ensure that the excess is cut from the plain end of the extension and that the inner (60mm) pipe is 7.5mm longer than outer (100mm) pipe (see fig. 13A). Remove any burrs, and check that any seals are located properly.

You must ensure that the entire flue system is properly supported and connected.

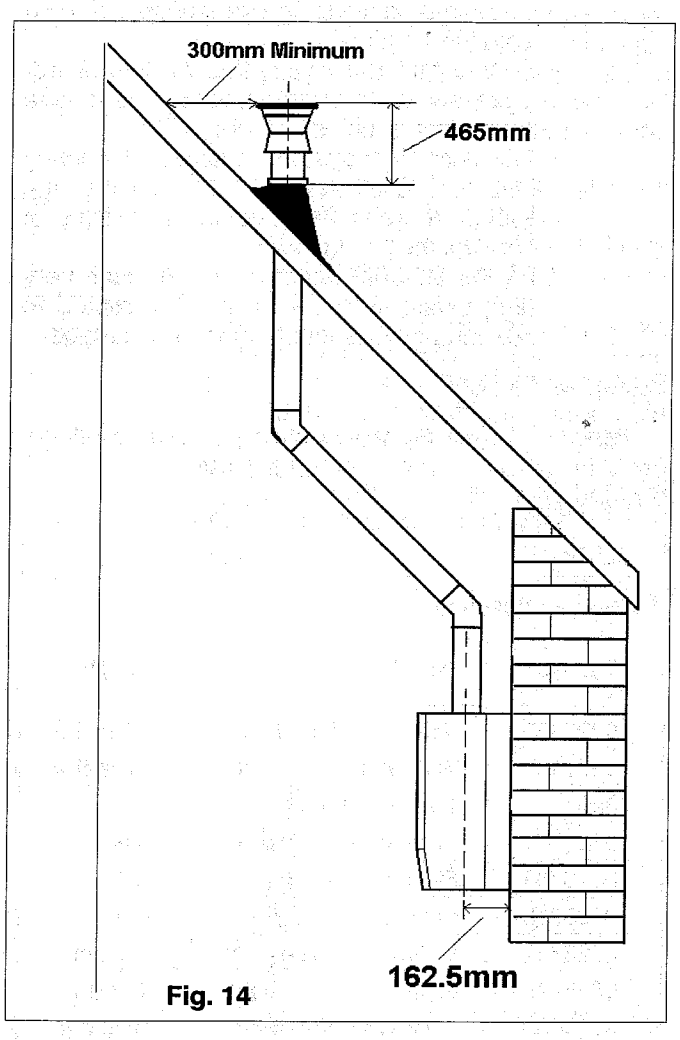

Fig. 14

5.5.3 TWIN FLUE SYSTEM

The Vokera twin flue system enables greater flue distances to be achieved (see 5.4.2) than that of the standard concentric flue system. It can be used for horizontal or vertical applications, however the twin flue system must be converted to the dedicated concentric flue kit for termination. It is essential that the installation of the twin flue system be carried out in strict accordance with these instructions.

GUIDANCE NOTES ON TWIN FLUE INSTALLATION

- The flue must have a fall back of 1° back to the appliance to allow any condensate that may form in the flue system to drain via the condensate drain. Consideration must also be given to the fact that there is the possibility of a small amount of condensate dripping from the terminal.
- Ensure that the entire flue system is adequately supported, use at least one bracket for each extension.
- The entire flue system must be adequately insulated to maintain heat within the flue system thereby reducing the possibility of condensate production.
- As the exhaust outlet pipe can reach very high temperatures it must be protected to prevent persons touching the hot surface.

Reduction for bend

Bend	Reduction in maximum flue length for each bend
45° bend	1.0 metre
90° bend	1.0 metre

Twin flue accessories

Part No.	Description	Length
0225805	Horizontal flue terminal	1.0 metre
0225810	Vertical flue terminal	1.0 metre
300	Twin adapter kit	N/A
0225770	Pitched roof flashing plate	N/A
0225765	Flat roof flashing plate	N/A
0225815	Condensate drain kit	N/A
0225820	0.25m extension (pair)	250mm
0225825	0.5m extension (pair)	500mm
0225830	1.0m extension (pair)	1000mm
0225835	2.0m extension (pair)	2000mm
0225840	45° bend (pair)	N/A
0225845	90° bend (pair)	N/A
0225850	Twin bracket (5)	N/A
0225855	Single bracket (5)	N/A

MOUNTING THE BOILER

The fixing holes for the wall-mounting bracket should now be drilled and plugged, an appropriate type and quantity of fixing should be used to ensure that the bracket is mounted securely. Once the bracket has been secured to the wall, mount the appliance onto the bracket.

5.5.3.1 INSTALLATION OF TWIN ADAPTOR KIT (fig. 15)

- Remove or discard the flue restrictor ring from the appliance flue outlet (see fig. 1).
- Insert the small restrictor ring (supplied with the twin adapter kit) **if** the total flue length – including the allowance for any bends – is less than 8 metres.
- Insert the exhaust connection manifold onto the appliance flue outlet.
- Place the silicone seal (supplied with twin adapter kit) over the rim of the exhaust connection manifold.
- Remove one of the blanking plates (located to the left & right of the appliance flue outlet) and – using the same screws – install the air baffle.

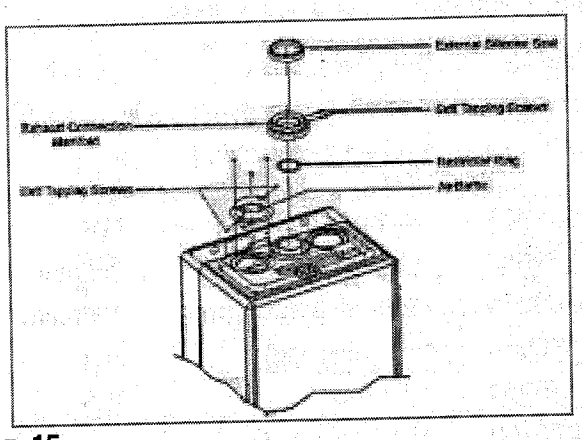

Fig. 15

5.5.3.2 INSTALLATION OF CONDENSATE DRAIN KIT (fig. 16)

The condensate drain kit must be fitted within 1 metre of the appliance flue outlet. It is recommended that the condensate drain kit should be fitted in the vertical plane, however it can be fitted horizontally with care.

- Fit the first bend to the condensate drain kit or exhaust connection manifold by firmly pushing in to position.
- Using the two holes in the exhaust connection manifold as a guide, drill a 3mm hole in each and secure using the screws provided.
- Connect the air inlet pipe to the air baffle as above.
- The twin flue pipes extensions and accessories can now be installed by pushing together (the plain end of each extension or bend should be pushed approximately 50mm into the female socket of the previous piece).

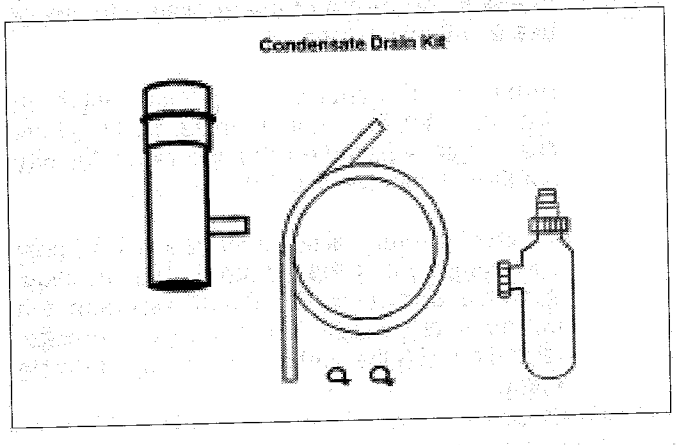

5.5.3.3 HORIZONTAL TERMINATION
(See fig. 17)

The twin flue system must be converted to the dedicated concentric flue kit for termination.

- The horizontal terminal is supplied with a built-in converter box and cannot be shortened.
- A 130mm hole is required for the passage of the concentric terminal through the wall.

Depending on site conditions it may be preferable to install the terminal assembly prior to fitting the twin flue pipes.
Mark and drill a 130mm hole for the passage of the horizontal flue terminal, ensuring that there is a 1° fall back to the boiler (17mm per 1000mm).
Insert the terminal assembly into the flue hole.
Push-fit the twin flue pipes onto the concentric to twin converter box ensuring that the exhaust pipe connects to the exhaust connection on the concentric to twin converter.
If necessary cut the plain ends (male) of the twin flue pipes to allow connection to the concentric to twin converter.

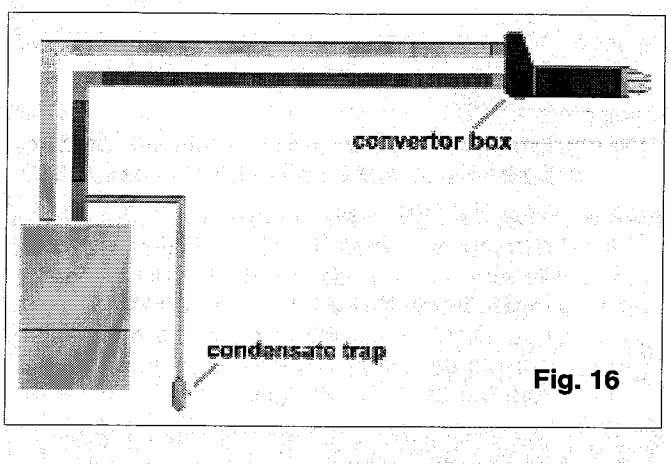

Fig. 16

NOTE; before cutting twin flue pipes ensure allowances have been made for connection onto the previous piece and onto the concentric to twin converter. The last twin flue pipes must be pushed 50mm onto the male spigots of the concentric to twin converter.

NOTE;
You must ensure that the entire flue system is properly supported and connected.

When cutting an extension to the required length, you should ensure that the excess is cut from the plain end of the extension. Remove any burrs, and check that both seals are located properly.

Seal the flue terminal assembly to the wall using cement or a suitable alternative that will provide satisfactory weatherproofing. The interior and exterior trim can now be fitted.

5.5.3.4 VERTICAL TERMINATION
(See fig. 18)

The twin flue system must be converted to the dedicated concentric flue kit for termination.

- The vertical terminal is supplied with a built-in converter box and cannot be shortened.
- A 130mm hole is required for the passage of the concentric terminal through the ceiling and/or roof.

Depending on site conditions it may be preferable to install the terminal assembly prior to fitting the twin flue pipes.

Fit the appropriate flashing plate to the roof and insert the vertical flue terminal through the flashing plate from the outside, ensuring that the collar on the flue terminal fits over the flashing.

Push-fit the twin flue pipes onto the concentric to twin converter ensuring that the exhaust pipe connects to the exhaust connection on the concentric to twin converter.
If necessary cut the plain ends (male) of the twin flue pipes to allow connection to the concentric to twin converter.

NOTE

- Before cutting twin flue pipes ensure allowances have been made for connection onto the previous piece and onto the concentric to twin converter. The last twin flue pipes must be pushed 50mm onto the male spigots of the concentric to twin converter.
- You must ensure that the entire flue system is properly supported and connected.
- Ensure that any horizontal sections of pipe have a 1° fall towards the appliance (17mm per 1000mm).
- The convertor box on the vertical terminal will have to be temporarily removed when inserting the terminal through the flashing.
- The condensate trap must be primed with water prior to commissioning the boiler.
- The condensate drain trap must be connected to the drain in accordance with building regulations or other rules in force.

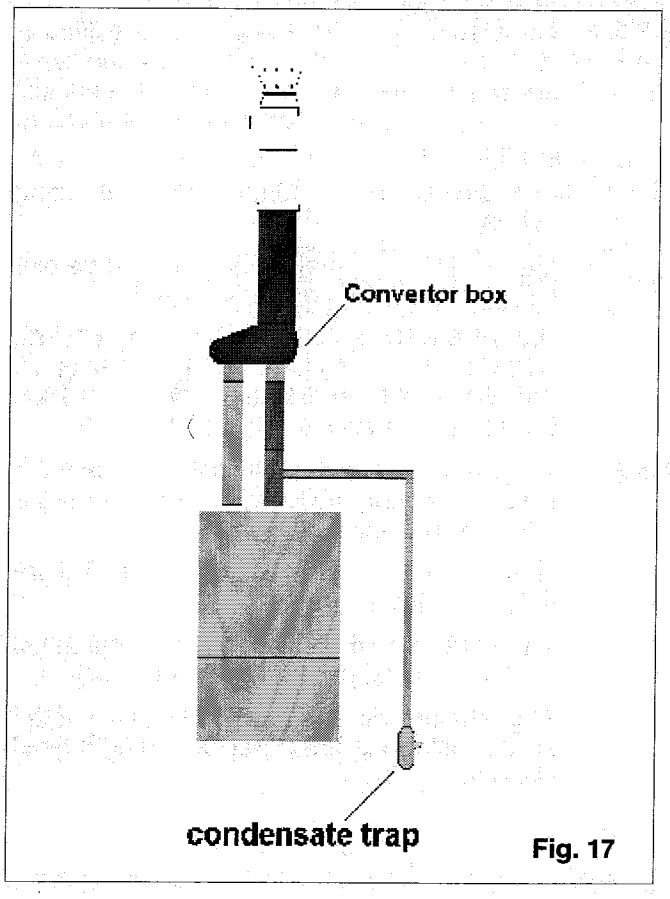

Fig. 17

5.6 CONNECTING THE GAS AND WATER

5.6.1 Figs. 10a & 18 show the locations of the fittings.

5.6.2 Do not over tighten nuts and use another spanner to apply counter force to avoid damaging the appliance.

5.6.3 GAS SUPPLY

Connecting the gas supply.

Connect a 15mm gas pipe to the gas service tap and tighten the union nut securing the tap to the appliance. Pipework to the appliance must be of adequate size. A minimum gas pressure of 20 mbar must be available at the appliance inlet at full flow rate. See section 3. Do not use pipes of a smaller size than the appliance inlet connection.

5.6.4 CENTRAL HEATING

Connect the central heating pipework (22mm o.d) to the respective valves, right hand = flow, left hand = return, and tighten the nuts.

5.6.5 SAFETY VALVE DISCHARGE

The safety valve is located beneath the pump. It has a threaded outlet (Rc ½" BSP Int) to permit a discharge pipe to be connected.

When connecting, ensure the discharge pipe does not restrict access to or operation of the central heating valves. The discharge should terminate facing downwards exterior to the building in a position where discharging (possibly boiling) water will not create danger or nuisance; but is in an easily visible position.

5.7 ELECTRICAL CONNECTIONS

5.7.1 The electricity supply must be as specified in clause 4.7. If controls external to the appliance are required design of the external electrical circuits should be undertaken by a competent person.

See section 10 for further electrical wiring details.

Factory fitted internal wiring must not be disturbed when wiring external controls

N.B. IT IS ESSENTIAL THAT ALL EXTERNAL CONTROL CIRCUITS AND WIRING IS WIRED FROM THE SAME ELECTRICAL ISOLATOR AS SERVES THE APPLIANCE.

5.7.2 To gain access to the terminals release the 2 screws securing the lower control facia to the upper outer casing.

Note these 2 screws are not captive. Ensure they are not lost.

The panel is bottom hinged. Lower the panel until it rests just past the horizontal position.

The terminal block is easily accessible under panel, inside the lower tray on the right hand side (see fig. 18a).

Fig. 18a

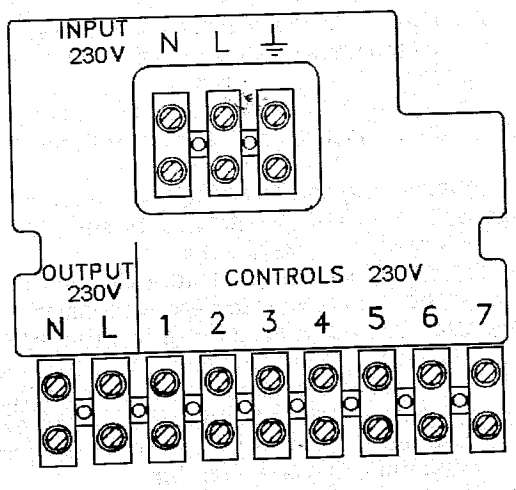

flexible sized 0.75mm² (24 x 0.2mm) to BS 6500.

Wiring to the appliance should be rated for operation in contact with surfaces up to 90°C.

5.7.4 Pass the cable through the cord anchorage and connect the wires Brown to L Blue to N and Green/Yellow to the earth connector on the **input terminal block**. Arrange the wires so that should the cable slip the anchorage the current carrying conductors become taut before the earthing conductor.

5.7.5 Securely tighten all terminal screws and arrange the cable with slack between the anchor and the terminal block. Tighten the cord anchorage.

5.7.6 Neatly arrange the external cable in such a way that unrestricted opening of the controls fascia is possible without strain on the cable.

5.7.7 External controls may be wired from terminals 1 and 3 of the controls terminal block (after removing the factory fitted link). If a neutral is needed use terminal N.

If required pass this cable through the spare cord anchorage.

The conductors should be so connected that the current carrying conductors become taut before the Earth conductor, should the cable slip the anchorage.

6.1 Where the text bears identifying numbers in brackets, refer to figs. 1 and 2 unless otherwise instructed.

6.2 GAS SUPPLY INSTALLATION

Inspect the entire installation including the meter, test for soundness and purge, all as described in BS 6891.

6.3 CENTRAL HEATING SYSTEM

6.3.1 IMPORTANT: Do not release air from the red sealed expansion tank. It is charged with air at the factory to 1 bar (15psig).

6.3.2 INITIAL FILLING OF THE SYSTEM

6.3.2.1 See Clause 3.4.3. and 4.6.8

6.3.2.2 Open central heating flow and return valves Unscrew the cap on the automatic air release valve (23) one full turn (leave open permanently).

6.3.2.3 Close all air release taps on central heating system.

6.3.2.4 Gradually open stopcock(s) at the filling point connection to the central heating system until water is heard to flow. Do not open fully.

6.3.2.5 Starting with the lowest radiator open each air release tap in turn closing it when clear water, free of bubbles, flows out. In the same way release air from any high points in the pipework.

6.3.2.6 Continue filling the system until at least 1.0 bar registers on the gauge (13) then turn off the filling stopcock(s).

6.3.2.7 Inspect the system for water soundness and remedy any leaks discovered.

6.3.3 INITIAL FLUSHING OF THE PIPEWORK

6.3.3.1 The whole of the heating system must be flushed both cold and later hot as detailed in 6.10. Open all radiator or heating valves and the appliance central heating valves. Drain the boiler and system from the lowest points. Open the drain valve full bore to remove any installation debris from the boiler prior to lighting. Refill the boiler and heating system as described in 6.3.2

6.3.4 SETTING THE SYSTEM DESIGN PRESSURE

6.3.4.1 The design pressure must be a minimum 1.0bar and a maximum of 1.5bar.

6.3.4.2 The actual reading should ideally be 1.0 bar plus the height in metres to the highest point of the system above the base of the appliance (up to the maximum of 1.5 bar total).

N.B. The safety valve is set to lift at 3 bar.

6.3.4.3 To lower the system pressure to the required value turn the red knob of the safety valve (19) a quarter turn to release water until the required figure registers on the gauge (13).

6.4 CHECKING ELECTRICITY SUPPLY

6.4.1 Carry out preliminary checks for earth continuity, polarity, short circuit and resistance to earth. (See page 44 for further details). Gaining access as required according to clause 5.7.2 in this manual.

6.4.2 Leave the appliance with the control fascia closed and secured and with the mains electricity switched OFF.

6.5 LIGHTING THE BOILER

6.5.1 Before lighting, open flow and return valves (6.3.2.2).

If external controls are fitted (e.g. timeclock and thermostat) ensure they 'call for heat'. The commissioning of the appliance may be easier if the external controls are temporarily disconnected and terminals 1 and 3 linked. (For access procedure turn off electricity and refer to clause 5.7.2 for instructions).

6.5.2 Ensure that the mains electricity and the appliance mode selector switch (16) is turned on.

6.5.3 Set the boiler thermostat (17) to the highest setting.

6.5.4 The boiler will now go through an ignition sequence and the burner will light.

6.5.5 If during the ignition attempt period (10 secs approx.) the boiler fails to light, the ignition control circuit will go to lockout de-energising the gas valve, but leaving the fan and pump running.

6.5.6 In the event of the boiler going to lockout depress the ignition reset button (15) which will be illuminated. The most common cause of the boiler going to lockout during commissioning is air in the gas supply. Check that the gas supply is completely purged of air and that gas is reaching the boiler then repeat from 6.5.2.

6.6 CHECK/ADJUST BURNER PRESSURE

6.6.1 The heat input is factory set to the maximum value given in section 3.6 but it is necessary to check/adjust this when commissioning.

The maximum heat input may be reduced by a simple adjustment to suit the system load. Refer to Fig.19 to determine the pressure for the heating output you need (e.g. for 85,000 Btu/h a pressure of 9 mbar is required).

6.6.2 Turn off the main electricity supply. Gain access to the interior as instructed in clause 5.7.2.

6.6.3 Locate the main burner pressure test point (Fig. 20) and slacken the screw in an anti-clockwise direction. Attach a suitable pressure gauge. Turn on the boiler for central heating & adjust the thermostat knob (16) to its maximum setting.

6.6.4 The pressure reading for maximum output should be:

11.0 mbar
(plus or minus 1.1 mbar).

If the pressure is wrong or if it is required lower it can be adjusted as follows:

Turn off electrical supply.

Referring to fig. 20, remove the dust cap on the gas valve regulator by unscrewing in a counter clockwise direction.

Turn on electricity supply and adjust the thermostat (17) to its maximum setting.

The boiler will now light at full flame, if not screw the regulator slowly clockwise until the burner lights.

Adjust the regulator screw until the correct pressure is obtained on the gauge.

Refit the dust cap ensuring the reading does not change.

Once this pressure has been fixed it should be indelibly recorded on the label provided and stick it next to the data badge. This is to ensure that the burner can be reset when any service operation involves alteration of the burner settings.

6.6.5 CHECKING THE SOFT LIGHT

6.6.6 To ensure correct cross ignition the gas valve opens momentarily at a reduced gas pressure, then opens to the preselected gas pressure. This initial opening of the gas valve is known as soft light.

6.6.7 The soft light pressure is factory set, check burner performance at this pressure observing burner ignition & flame characteristics. The burner should ignite properly without flashback and all injectors should remain lit. Cycle burner several times (wait 15 seconds between each cycle to allow servo system to reset).

Fig. 19

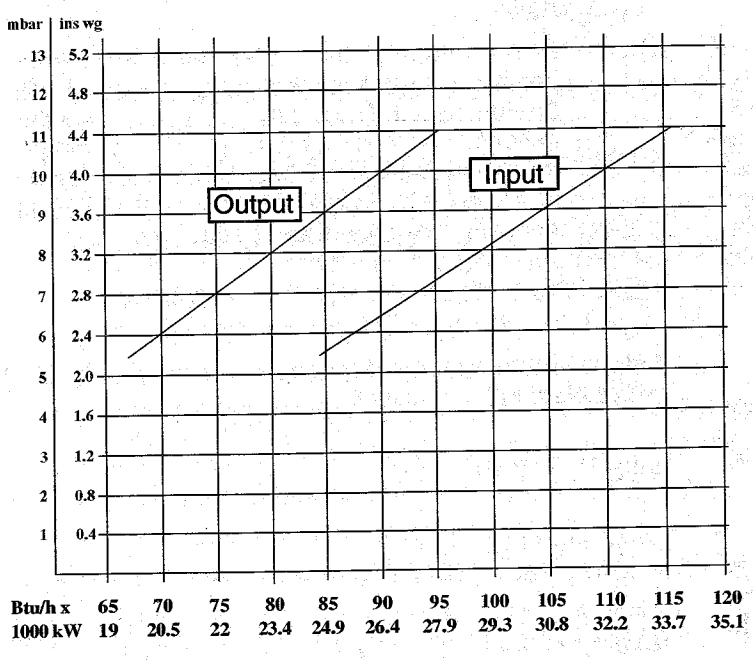

Fig. 20

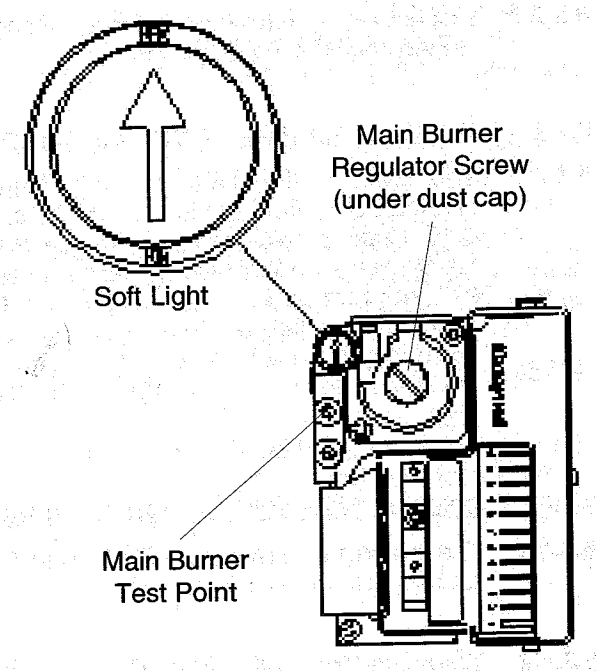

6.6.8 If any ignition irregularities were noted during this test period, the soft light will need adjusting as follows:

Turn off electrical supply.

Referring to fig. 20, remove the dust cap on the soft light regulator by unscrewing in a counter clockwise direction.

Turn the adjustment screw one step in the direction "MAX" to increase or in the direction "MIN" to decrease the soft light pressure.

After each adjustment of the regulator, turn on the electricity supply and recheck burner ignition. When the required level is achieved, replace the dust cap by screwing in a clockwise direction.

6.7 CHECKING THE FLUE SYSTEM

6.7.1 The flue system should be visually checked for soundness. Check all clamps and fixings are secure and tight.

6.8 CHECKING THE HEATING THERMOSTAT

6.8.1 Allow the system to warm up and manipulate the control thermostat to ensure the burner switches from 'on' to 'off' and vice versa (scale range covers approx. 45°C - 85°C).

6.9 REGULATING THE CENTRAL HEATING SYSTEM

6.9.1 Fully open all radiators and circuit valves and run the appliance in the central heating mode until heated water is circulating. If conditions are warm, remove any thermostatic valve heads.

6.9.2 If the burner will not light, ensure that water is in fact circulating. See 4.6.3.

6.9.3 Adjust radiator return valves and any branch circuit return valves until the individual return temperatures are correct and are approximately equal.

6.9.4 When all is adjusted, progressively close all radiator valves to ensure that the appliance still operates when flow through the system is limited. If the burner cuts out prematurely due to lack of water flow through the appliance, the system should be regulated to ensure a flow rate of at least 350 litres/hour (1.28 gals/min). This may mean the addition of a small manual by-pass being fitted to the system if a fully TRV system is used.

6.10 FINAL FLUSHING OF THE HEATING SYSTEM

6.10.1 The system should be flushed in accordance with BS 7593: 1992. Turn on the boiler for central heating and allow the boiler and system to reach temperature. Turn off the boiler and drain the system whilst still hot.

Refill the boiler and heating system as described in 6.3.2.

Although not necessary for correct operation of the boiler, an inhibitor may be added at this point. Contact the inhibitor manufacturer for further information concerning application and dosage.

6.10.2 Inspect the system for soundness. Turn the appliance mode selector switch to off (Fig 1, 16).

6.11 FINAL CHECK FOR OPERATIONS

6.11.1 Disconnect pressure gauge, tighten screw. Relight boiler.

6.11.2 Re-check for gas soundness.

6.11.3 Re examine heating system for water soundness.

6.11.4 Check the appearance of the gas flame to assess adequacy of combustion air supply.

6.11.5 Re-check the flue system for soundness and adequacy of supports.

6.12 CONCLUDING OPERATIONS

6.12.1 If external controls have been disconnected and terminals 1 and 3 temporarily linked remove the link and reconnect the external control circuit, check the operation of the external controls.

6.13 REFIXING THE FRONT CASING. (Fig. 21)

6.13.1 Offer up the front casing to the back frame in a near vertical attitude and locate the hooks on the casing over the hooks on the frame. Slide the casing downwards to fully engage the hooks, locate the bottom of the case onto the lower lugs and push home. Lift the lower control facia into place and replace the 2 screws.

6.14 Complete details of the boiler, controls, installation and commissioning in the log book supplied with the boiler. This is an important document which must be correctly completed and handed to the user. Failure to install and commission this appliance to the manufacturers instructions may invalidate the warranty.

Fig. 21

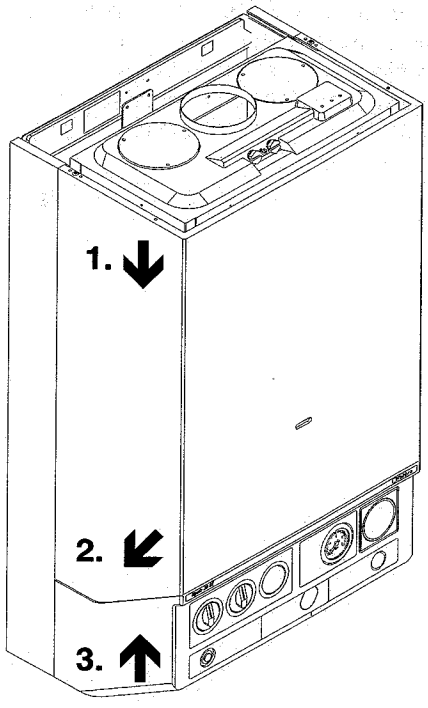

SECTION 7 INSTRUCTING THE USER

7.1 Hand over the copy of the user instructions and boiler logbook supplied, together with this installation book, and explain how to operate the boiler correctly. Explain how to use the timeclock and room thermostat if fitted.

7.2 Show the user how to switch off the appliance and indicate the position of the electric supply isolator.

7.3 Inform the user of the location of all drain cocks and air vents.

7.4 Explain how to turn the appliance off for both long and short periods and advise on the precautions necessary to prevent damage should the appliance be inoperative when freezing conditions may occur.

7.5 Show the user the filling loop position, its function and how to re-pressurise the system using the filling valve.

7.6 Finally advise the user that, for continued safe and effective operation, the appliance must be serviced by a competent person at least once a year.

8.1 GENERAL

To ensure the continued safe and efficient operation of the appliance, it is recommended that it is checked and serviced as necessary at regular intervals. The frequency of servicing will depend upon the particular installation conditions and usage but in general once per year should be adequate. It is the law that all servicing work is carried out by a competent person such as a Vokèra service engineer, British Gas or other CORGI registered personnel.

The following instructions apply to the boiler and its controls, but it should be remembered that the central heating system will also require attention from time to time.

8.2 IMPORTANT NOTES

WARNING: Having carried out preliminary flame checks and before starting any servicing work, switch OFF the mains electricity supply and disconnect the plug at the main isolating switch and socket. (If a switch is used remove the fuse.)

Turn off gas supply at the gas service tap fitted to the appliance.

Always test for gas soundness after any service work and after exchanging any gas carrying component.

8.3 RECOMMENDED ROUTINE SERVICING

8.3.1 ANNUAL SERVICING

When servicing is required the following procedures should be carried out:

1. Inspect exterior for signs of damage and deterioration particularly of flue, pipework and electrical connections.
2. Turn off mains electricity and remove front casing (see clause 8.4).
3. Replace fuse if previously removed (8.2 above) and turn on electricity. Run the boiler for a few minutes to permit inspection of its operation, inspect the burner for yellowing of flame tip, flame lift off or sooting.
4. Ensure central heating valves (fig. 1, 18) are open. Note these are ¼ turn valves which are open when the line on the square shank is vertical, closed when line is horizontal.

   Observe pressure gauge reading (fig. 1, 13) which should be approximately 1bar when the system is cold (see clause 6.3.4)
5. Turn off mains electricity and turn off gas service tap on the appliance.
6. Gain general access as described in clause 8.4.
7. Remove main burner. (8.6 to 8.6.8.) Lightly clean with a soft brush and inspect for damage. If during initial inspection, any combustion irregularity was suspected, remove injectors and clean or replace (see 8.7).
8. Place cloth below combustion chamber to catch debris. Clean heat exchanger using suitable brushes and rods if necessary.
9. Inspect combustion chamber lining. The insulating material is easily damaged. Do not scrape, but clean off lightly.

   If any panels are damaged these should be replaced (see 8.11).
10. Replace all parts in reverse order but leave the controls fascia open and outer casing off.
11. Undertake a complete commissioning check as detailed in section 6.
12. Refix the front casing and close up the lower control panel.
13. Clean off casing using soft cloth and dilute detergent.
14. Complete details of service undertaken in the boiler logbook.

Occasional maintenance of mechanical parts will be necessary. Service kits are available from your Vokèra stockist.

8.3.2 REPLACEMENT OF PARTS

The life of individual components varies and they will need servicing as and when faults develop. The fault finding sequence charts in section 9 will serve to locate which component is the cause of any malfunction. Instructions for removal, inspection and replacement of the individual parts are given in the following pages.

8.4 TO GAIN GENERAL ACCESS/ REASSEMBLY

To remove components access to the interior is essential.

Refer to figs. 22 & 23

Ensure gas and electricity supplies are isolated before carrying out any servicing.

8.4.1 To lower the control facia.

Remove the 2 screws securing the lower control facia to the upper outer casing, the lower control facia will now hinge downwards. (Fig. 22)

8.4.2 To remove the upper outer casing disengage the 2 locating pins at the bottom left and bottom right corners by pulling the casing forwards. Slightly lift the casing to disengage from the top suspension hooks. (Fig. 23)

8.4.3 Reassembly is always carried out in reverse order to dismantling, unless otherwise stated. Electrical connections must be remade in accordance with the wiring diagram fig.39.

8.4.4 Wherever gas control components are replaced, check the burner pressures and adjust if necessary. cl. 6.6.

Fig. 23

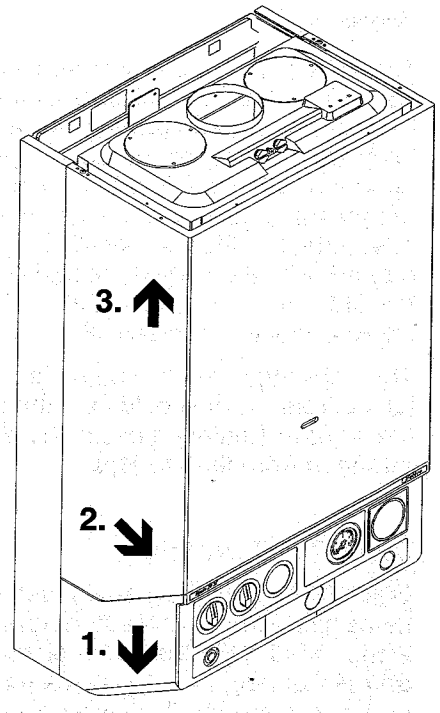

1. Lower the control facia.
2. Pull the outer casing forwards to disengage the lower locating pins.
3. Slightly lift casing to disengage from the top suspension hooks.

8.5 ROOM SEALED CHAMBER FRONT COVER (including viewing window)

Refer to fig. 24

8.5.1 Gain general access as 8.4

8.5.2 Remove roomsealed front cover plate by releasing eight screws (fig. 24) and easing cover off. The screws are not captive. inspect gasket for damage. If damaged, replace.

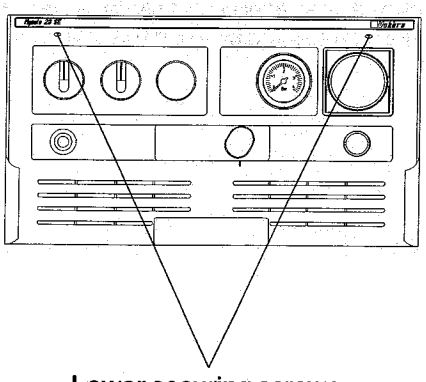

Fig. 22

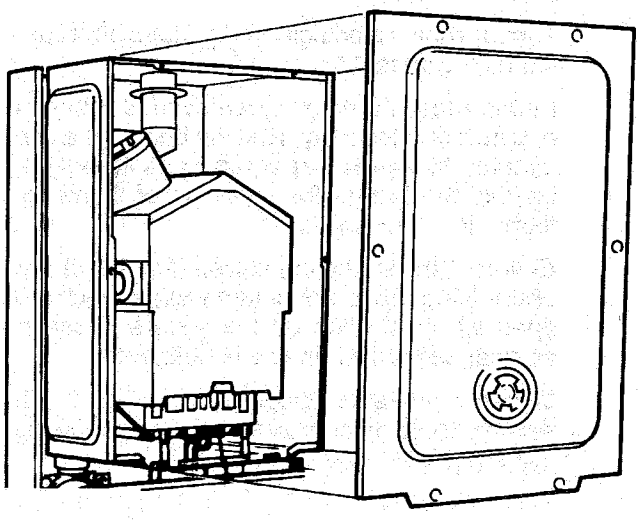

Fig. 24

8.6 MAIN BURNER AND/OR SPARK AND SENSING ELECTRODES

Refer to Figs. 25,26 & 27

8.6.1 Gain general access as 8.4.

8.6.2 Remove room-sealed chamber front cover plate as 8.5.2

8.6.3 Remove front of combustion chamber by releasing six screws (fig. 25).

8.6.4 Remove four burner retaining screws (Fig. 26) ease burner forward and rest on chamber base.

8.6.5 Release electrode retaining screws and carefully remove electrodes (Fig. 27).

8.6.6 Trace electrode lead to electronic ignition control and disconnect.

8.6.7 Repeat for other electrode.

8.6.8 Remove main burner. Reassemble in reverse order ensuring the correct location of the electrodes.

8.7 MAIN BURNER INJECTORS

8.7.1 Gain general access as 8.4

8.7.2 Remove room-sealed front cover plate and combustion chamber front (8.5.2 & 8.6.3).

8.7.3 Remove main burner as 8.6.4 - 8.6.5

8.7.4 Unscrew injectors. Reassemble in reverse order.

Fig. 25

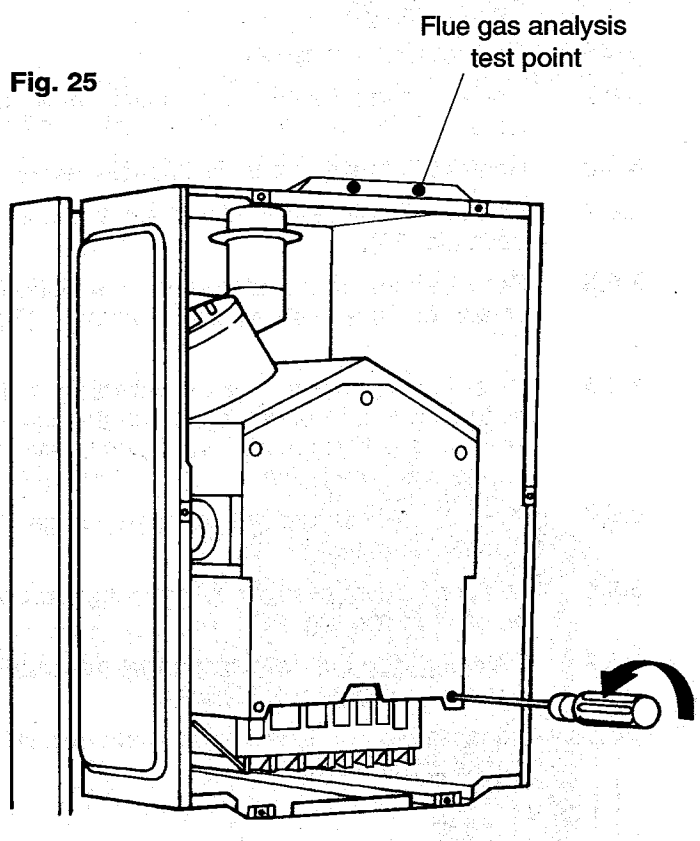

Fig. 26

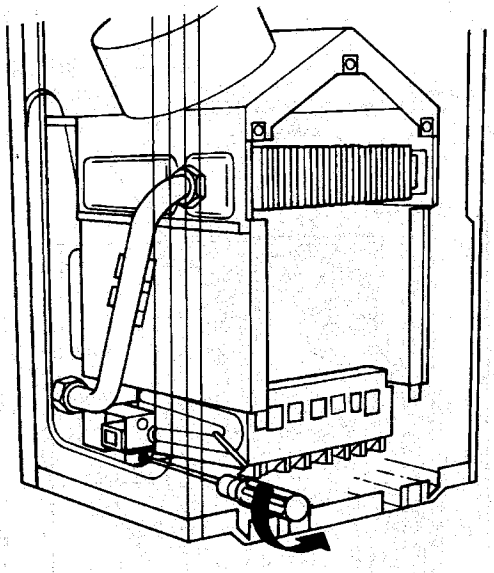

Fig. 27

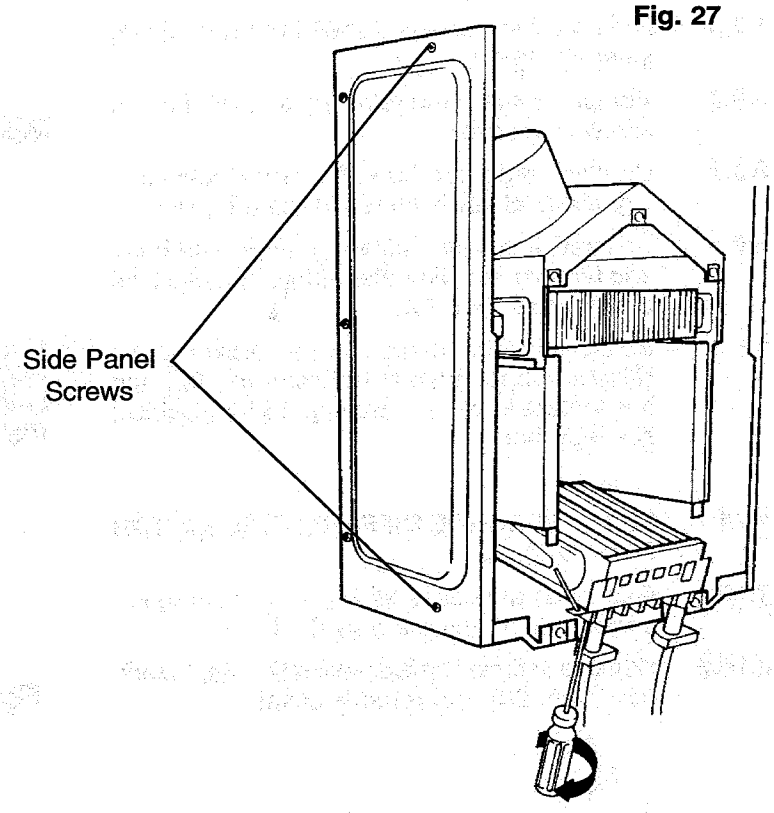

8.8 **MAIN HEAT EXCHANGER**
Refer to fig. 28.

8.8.1 Gain general access as 8.4.

8.8.2 Remove room-sealed front cover plate as 8.5.2

8.8.3 Remove front of combustion chamber as 8.6.3.

8.8.4 Remove two air baffle plates. 1 screw securing each (fig. 29).

8.8.5 Remove both room sealed side cover plates (5 screws each) and slide panels forwards. (Fig. 27)

8.8.6 Close heating flow and return valves fig. 1, 18 by turning ¼ turn until the line on the square shanks are horizontal. Turn safety valve ¼ turn to drain the boiler.

8.8.7 Place a cloth under the heat exchanger to catch surplus water.

8.8.8 Disconnect upper flanges by removing 2 screws on each flange (fig. 28).

8.8.9 Carefully slide out heat exchanger avoid spillage of water on boiler electric's.

8.8.10 Reassemble in reverse order using new fibre washers on both unions.

8.9 **FLUE FAN**
Refer to fig. 29.

8.9.1 Gain general access as 8.4.

8.9.2 Remove room-sealed front cover plate as 8.5.2

8.9.3 Remove front of combustion chamber as 8.6.3

8.9.4 Unscrew maintenance clip securing screws and remove clip.

8.9.5 Remove 2 silicone air tubes from nozzles on inner flue bend.

8.9.6 Remove 3 flue hood retaining screws. (centre screw is captive).

8.9.7 Carefully slide flue hood forward disconnecting electrical leads on fan in the process.

8.9.8 Unscrew 4 screws retaining fan to flue hood and remove fan. Transfer aluminium manifold (2 screws) to new fan.

8.9.9 Reassemble in reverse order, ensuring the silicone rubber gasket between the fan and flue hood is in place. (See fig. 39 for electrical connections)

8.10 **FLUE PRESSURE DIFFERENTIAL SWITCH**
Refer to fig. 29

8.10.1 Gain general access as 8.4. & remove room-sealed front cover plate as 8.5.2

8.10.2 Remove 5 screws on pressure differential switch cover (fig. 29) and remove cover.

8.10.3 Pull the 2 air tubes from nozzles on pressure switch and disconnect electrical connections.

8.10.4 Reassemble in reverse order. See fig. 39 for correct fitting of electrical connections. The air pipes must be reconnected to the correct nozzles. (The positive nozzle on the pressure switch connects to the lower nozzle on the flue bend & vice versa).

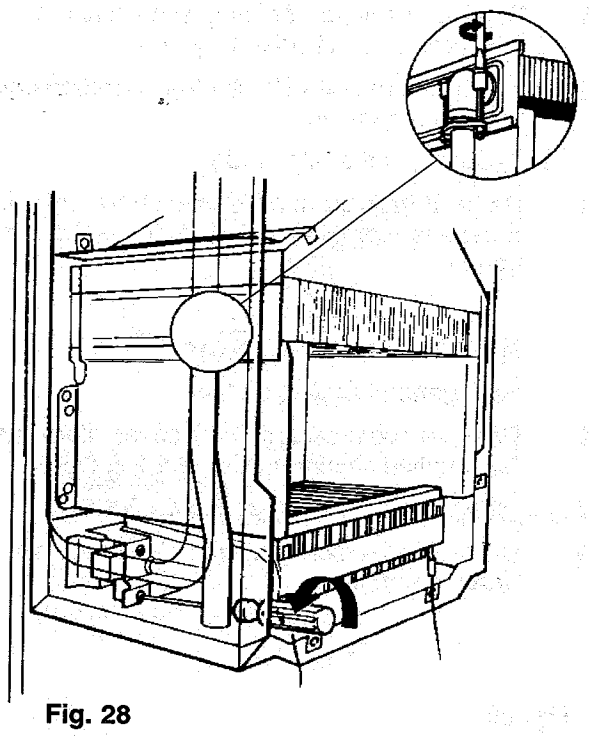

Fig. 28

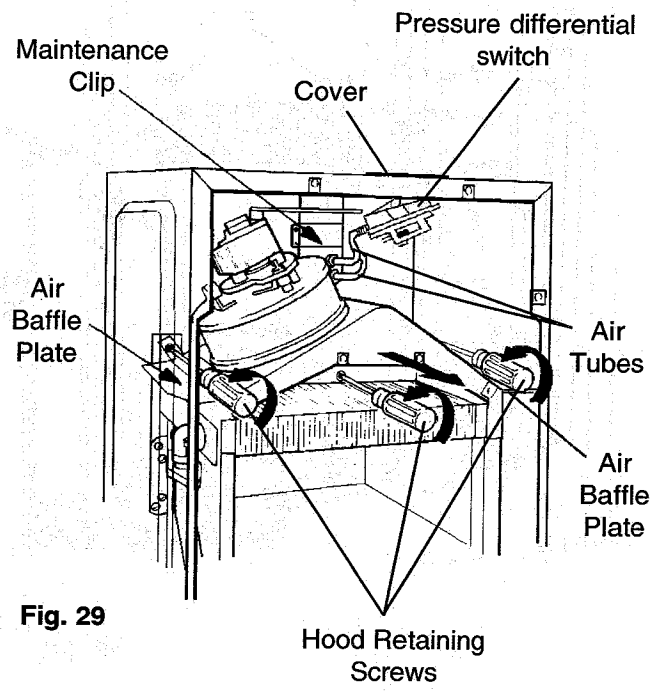

Fig. 29

8.11 COMBUSTION CHAMBER INSULATION BOARDS

8.11.1 Gain general access as 8.4.

8.11.2 Remove room-sealed front cover 8.5.2. Remove front of combustion chamber 8.6.3 Remove main heat exchanger 8.8

8.11.3 To remove side combustion chamber insulation boards, gently prise upwards and pull out.

8.11.4 To remove rear board, gently prise upwards and pull out.

8.11.5 Fourth board (front) is replaced complete with combustion chamber front panel.

8.12 GAS CONTROL VALVE (COMPLETE)

Refer to figs. 30 & 31.

8.12.1 Turn off gas service tap.

8.12.2 Remove ignition control box as 8.19.23.

8.12.3 Pull off silicone tube from gas valve regulator. (fig. 31)

8.12.4 Unscrew gas service tap union & release from it's seating.

8.12.5 Remove 2 screws securing gas valve bracket to the base frame.

8.12.6 Undo union above the gas control valve & withdraw gas valve.

8.12.7 Remove 8 flange securing screws, 4 securing screws at the top & 4 at the bottom. Transfer both inlet and outlet pipes to new valve ensuring a new gasket is used on each connection.

8.12.8 Reassemble in reverse order.

8.12.9 Test all joints for gas soundness.

8.12.10 Check burner pressures (cl. 6.6).

Fig. 31

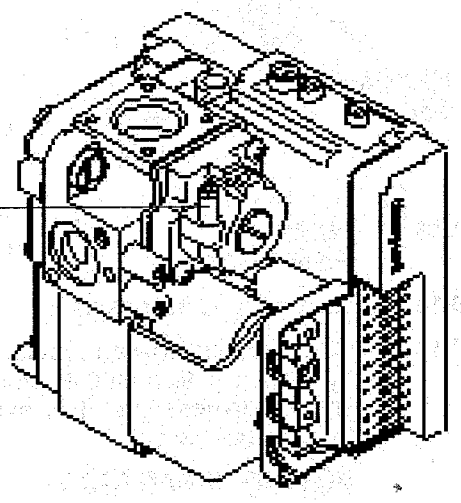

Fig. 30

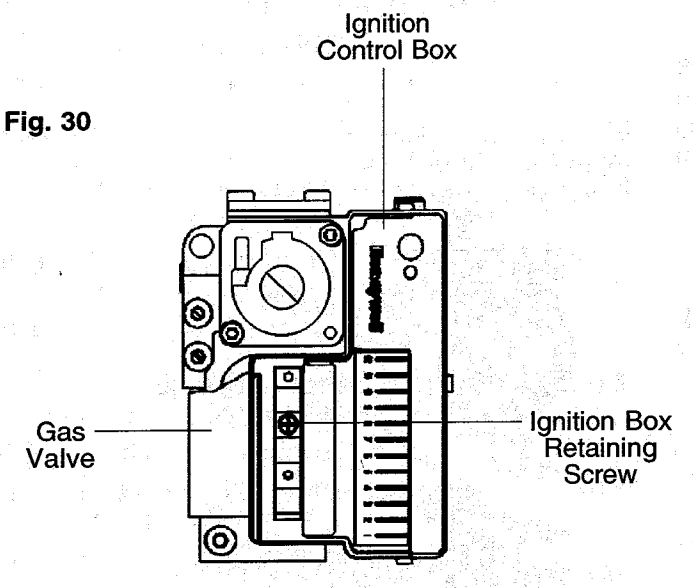

GAS CONTROL VALVE COMPLETE WITH IGNITION CONTROL BOX

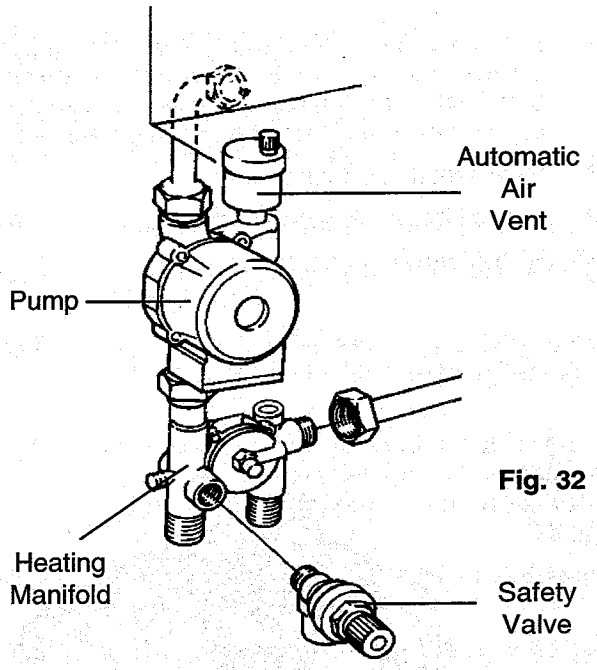

Fig. 32

8.13 PUMP
Refer fig. 32

8.13.1 Gain general access as 8.4

8.13.2 Close heating flow and return valves fig. 1,18 by turning ¼ turn until the line on the square shanks are horizontal. Turn safety valve ¼ turn to drain the boiler.

(A) PUMP (HEAD ONLY)

8.13.3 Unscrew 4 allen screws, withdraw head, disconnect electrical leads. (If replacement required, use the head from a standard 15-50 pump.

(B) PUMP (COMPLETE)

8.13.4 Disconnect pipe union connection at front left corner of combustion chamber. (Access to connection is around right hand side of gas valve using flat jaw adjustable spanner - 30mm across flats).

8.13.5 Undo lower pump union and remove pump.

8.13.6 Disconnect electrical leads from pump.

Reassemble in reverse order. Reconnect electrical leads. Brown to L, Blue to N, Yellow/green to E.

8.14 HEATING MANIFOLD
Refer to fig. 32 & 33

8.14.1 Remove pump complete as 8.13.

8.14.2 Disconnect safety valve discharge pipe and heating valve unions.

8.14.3 Remove retaining screw (securing manifold to frame).

8.14.4 Disconnect expansion vessel pipe union, pressure gauge connection and heating flow pipe union.

8.14.5 Unscrew and remove retaining nut and remove micro switch.

8.14.6 Remove manifold

8.15 MANIFOLD ASSEMBLY

8.15.1 Release cover retaining screws and ease off with a screwdriver.

8.15.2 Refer to fig. 33 for location of components.

8.15.3 Replace in reverse order, ensuring that washers are replaced in all union connections.

8.16 CHECKING/REPLACING MAIN EXPANSION VESSEL

8.16.1 The expansion vessel is factory pressurised to 1 bar (14.7psi) and should be checked during servicing. Should it have lost pressure it can be repressurised in situ. Drain the boiler. Fit a suitable pump and gauge (ie car foot pump and gauge) to the nipple at the top right-hand side of the expansion vessel, and pressurise to 1 bar (14.7psi) and remove the pump.

NOTE: Access to the nipple can be improved by loosening the upper vessel retaining screws and rocking the vessel forwards.

If the vessel cannot be repressurised or if pressure loss is very frequent the expansion vessel will require changing. Alternatively, a new vessel can be fitted in the return to the appliance, and the old vessel isolated in situ.

N.B. If the boiler is installed with a clearance above of 345mm (13.5in) or more and with a side exit flue it is possible to remove the expansion vessel in situ. follow steps 8.16.9 - 8.16.10

If the clearance above is less than 345 mm (13.5in) or with a back exit flue it is not possible to remove the expansion vessel in situ, follow steps 8.16.2 - 8.16.10.

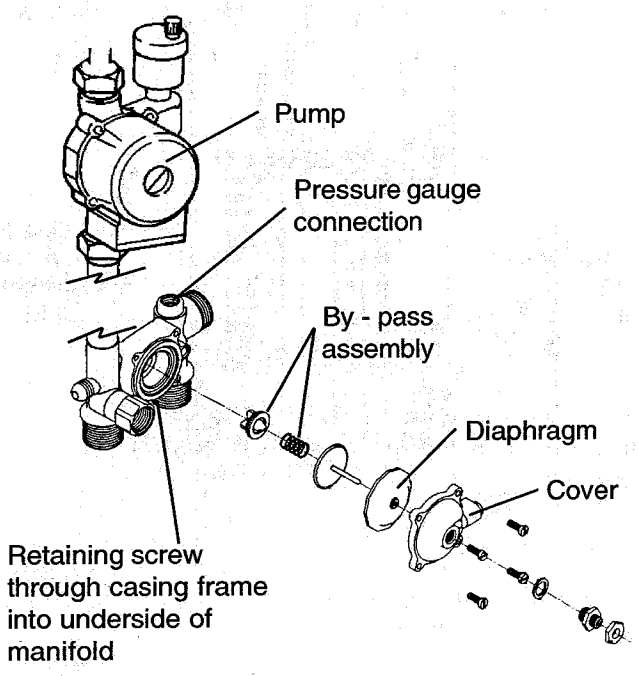

Fig. 33

8.16.2 Gain general access as 8.4

8.16.3 Close central heating flow and return valves fig. 1, 18 by turning ¼ turn until the line on the square shanks are horizontal.

8.16.4 Drain appliance via safety valve by ¼ turn of knob.

8.16.5 Remove screws on large maintenance clips (fig. 34) and remove clips, loosen screws on the small clips and remove flue elbow.

8.16.6 Disconnect all pipe unions at the appliance base.

8.16.7 Switch OFF mains electricity and disconnect electrical connections at terminal block.

8.16.8 Remove lower fixings and lift appliance off upper bracket.

8.16.9 Remove 2 screws securing vessel at top. Disconnect expansion pipe at heating manifold, lift vessel & pipe out of appliance.(fig. 35)

8.16.10 Reassemble and remount all in reverse order.

8.17 SAFETY VALVE

8.17.1 Gain general access as 8.4

8.17.2 Close heating flow and return valves fig.1 18 by turning ¼ turn until the line on the square shanks are horizontal. Turn safety valve ¼ turn to drain the boiler.

8.17.3 Remove Flow Microswitch as 8.19.2.

8.17.4 Unscrew safety valve discharge pipe.

8.17.5 Unscrew complete valve from Heating Manifold.

8.17.6 Replace in reverse order.

8.18 PRESSURE GAUGE

8.18.1 Gain general access as 8.4

8.18.2 Close heating flow and return valves fig.1 18 by turning ¼ turn until the line on the square shanks are horizontal. Turn safety valve ¼ turn to drain the boiler.

8.18.3 Trace capillary from back of gauge to connecting point on heating manifold (fig. 33).

8.18.4 Unscrew union on manifold.

8.18.5 Squeeze plastic locking lugs behind facia and press gauge from aperture.

8.18.6 Replace in reverse order.

8.19 REMOVAL OF ELECTRICAL COMPONENTS

8.19.1 Ensure electricity is switched off at main isolator. Gain general access as 8.4

8.19.2 FLOW MICROSWITCH

8.19.3 Hold switch and unscrew retaining nut.

8.19.4 Remove switch and remove cover.

8.19.5 Pull off electrical tab connections.

8.19.6 HIGH LIMIT THERMOSTAT

8.19.7 Pull off the 2 electrical connections on the back of the thermostat.

8.19.8 Release 2 screws securing thermostat to flow pipe.

8.19.9 Reassemble in reverse order.

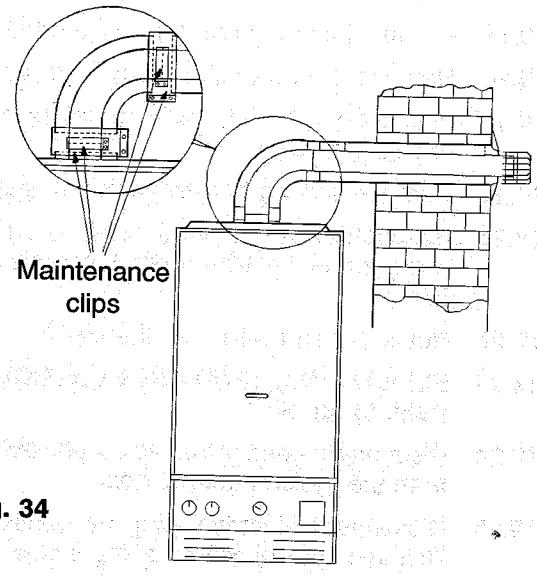

Fig. 34

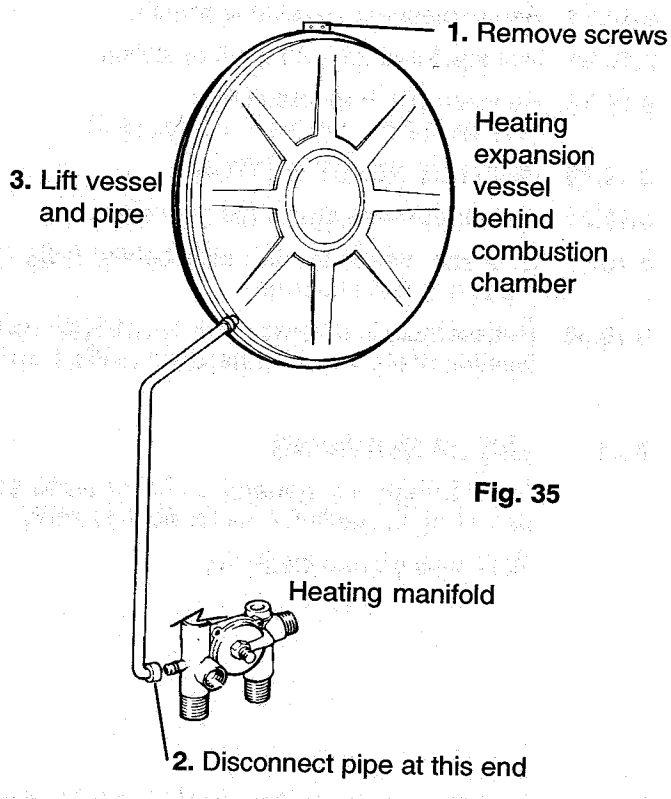

Fig. 35

8.19.10 SAFETY THERMOSTAT
Refer to fig. 36.

8.19.11 Pull off two electrical tab connectors on safety thermostat.

8.19.12 Ease off thermostat retaining clip.

8.19.13 Reassemble in reverse order.

8.19.14 HEATING THERMOSTAT

8.19.15 Remove room-sealed front cover 8.5.2

8.19.16 Trace capillary tube to sensor, and remove the sensor from it's pocket.

8.19.17 Pull electrical tabs off back of thermostat.

8.19.18 Remove the earth lead from thermostat.

8.19.19 Pull knob off front facia panel revealing 2 retaining screws.

8.19.20 Remove screws to release thermostat.

8.19.21 Reassemble in reverse order ensuring the wires connect to the correct terminals (see fig. 39).

8.19.22 Replace earth wire onto thermostat.

8.19.23 ELECTRONIC IGNITION CONTROL BOX
Refer to fig. 30

8.19.24 Disconnect sensor and spark electrode leads from the ignition control box.

8.19.25 Disconnect electrical plug by gently pulling. Release control box retaining screw.

8.19.26 Release control box from gas valve by gently easing forwards.

8.19.27 Reassemble in reverse order.

8.19.28 MODE SELECTOR SWITCH

8.19.29 Pull knob off front facia panel revealing 2 retaining screws

8.19.30 Remove screws to release switch.

8.19.31 Pull electrical tabs off back of switch.

8.19.32 Reassemble in reverse order.
(see fig. 39 for electrical connections).

8.19.33 IGNITION RESET BUTTON

8.19.34 Pull off three electrical tab connectors.

8.19.35 Squeeze plastic locking lugs behind facia & press unit from aperture.

8.19.36 Reassemble in reverse order ensuring correct location of electrical connections (see fig. 39).

8.20 END OF SERVICING

Run through the general commissioning as described in Section 6 as far as they apply.

Refit casings and clean up.

Fig.36

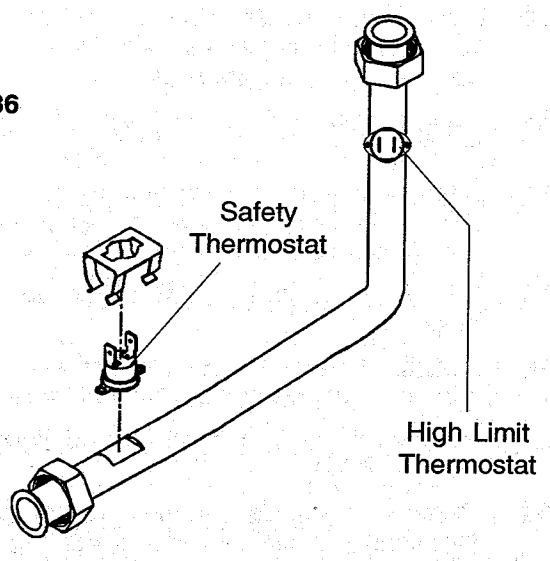

9.1 On completion of any service/fault finding task which has required the breaking and remaking of electrical connections the checks Earth Continuity, polarity and Resistance to Earth must be repeated.

The following flow diagrams suggest the logical sequence of steps for fault finding.

They are not exhaustive but cover all that can reasonably be carried out on site by the installer or service engineer.

Acquaintance with the functional sequence will prove helpful for some, and this is included for reference. As further help, the role of each part is briefly described.

Also included in this section are wiring diagrams and schematics to assist in fault location and servicing as described in the text.

9.2 **SEQUENCE OF FUNCTIONS**

When following this sequence, refer to figs. 38 & 39. It is assumed that the mode selector switch and gas supply are ON.

With all the controls calling for heat the pump will start and operate the boiler flow switch. At the same time a supply through the boiler control thermostat (P1-1) via the safety thermostat will energise terminal 10 of the ignition control box.

This supply is connected internally to terminal 5 which supplies power to the common of the air pressure switch via the fan.

The fan starting will cause the air pressure switch to change over energising it's normally open contact and in turn terminal 9 of the ignition control box.

There will be a short delay, followed by the gas valve being energised via the high limit thermostat and the electrode to start sparking.

If a flame is detected during the ignition attempt time (8-12 seconds) the sparking will stop, the gas valve will remain energised and the boiler will produce heat while there is a demand.

If a flame is not detected the boiler will go to lockout (failure to detect a flame during the ignition attempt period).

At which time the gas valve will be de-energised and the sparking will stop. To reset the boiler after lockout depress the ignition reset button which will be illuminated.

When the boiler thermostat is satisfied and P1-1 breaks the boiler circuitry will go to rest, but the pump will remain running to circulate water around the radiators.

If the supply to P1 is broken (e.g. by a room thermostat) the pump will continue to run until the boiler thermostat calls for heat, where upon the pump will stop.

Should there be a restriction in the heating circuit reducing the flow rate through the boiler to below 350 litres/hour (1.28gpm) the boiler flow switch will open and de-energise the fan which in turn shuts down the boiler.

KEY:

MODE SW	Mode Selector Switch.
F.S.	Boiler Flow Switch.
E.B.	Ignition Control Box.
P.D.S.	Air Pressure Switch.

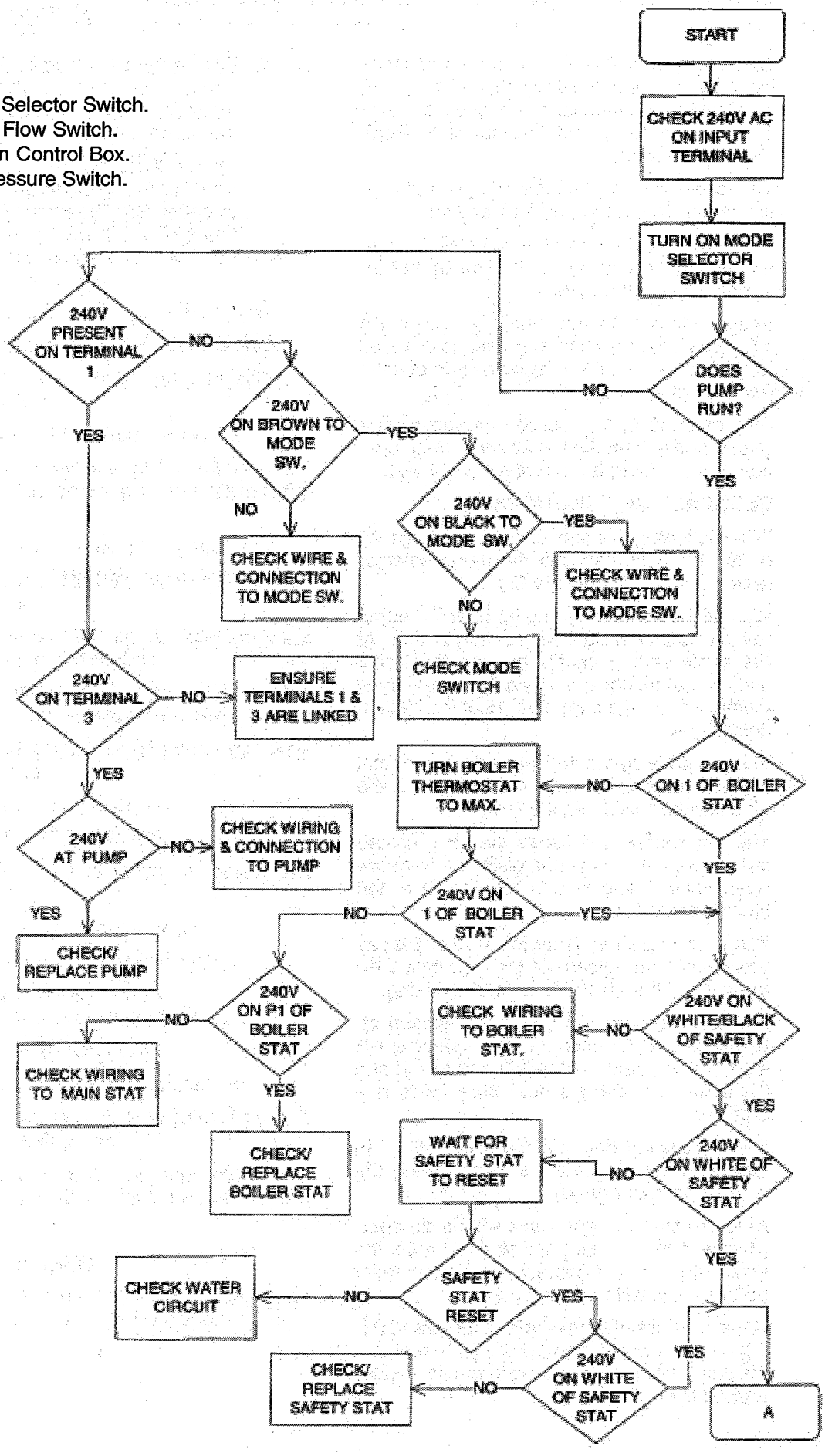

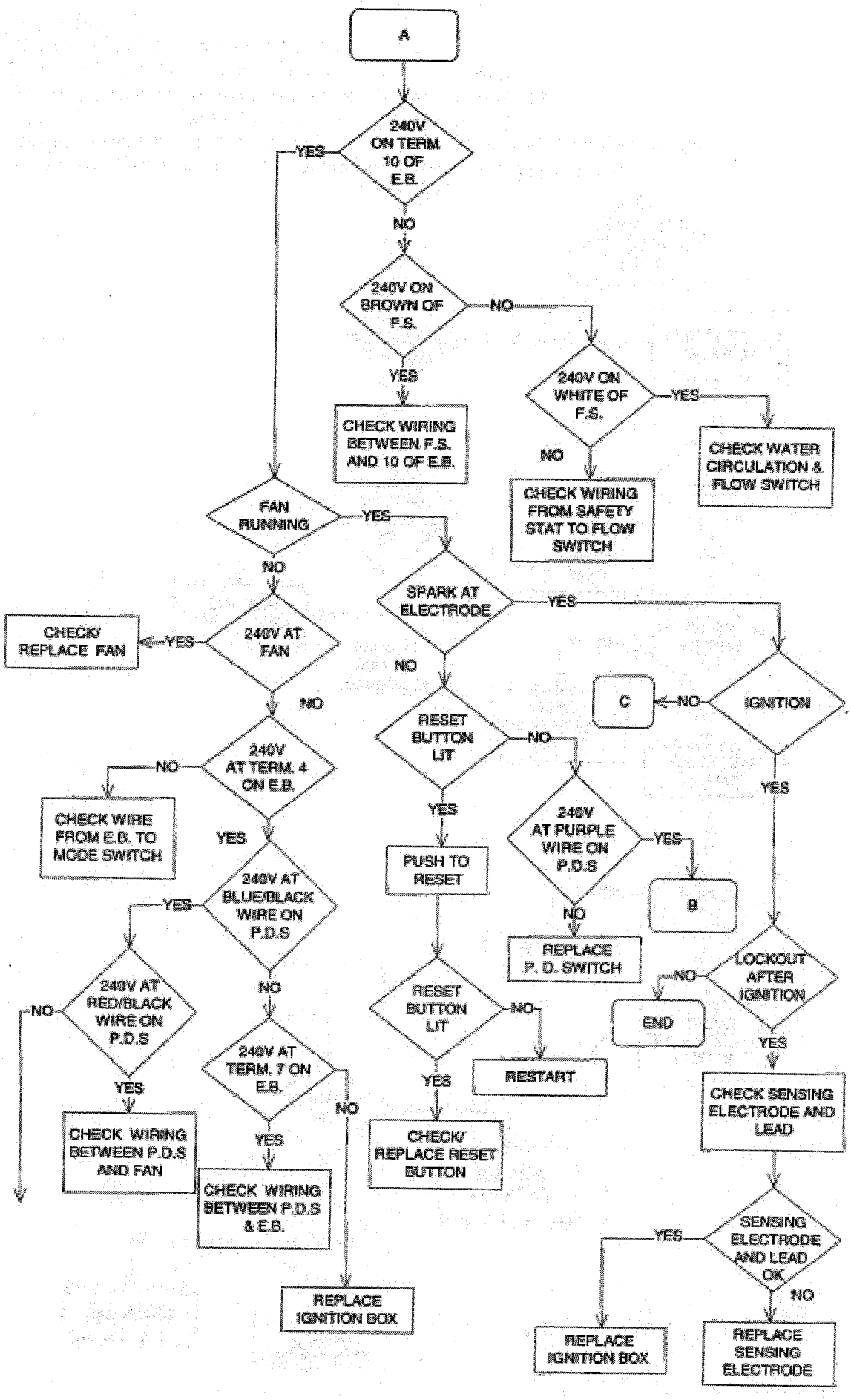
A
240V ON TERM. 10 OF E.B.
YES
NO
240V ON BROWN OF F.S.
NO
YES
CHECK WIRING BETWEEN F.S. AND 10 OF E.B.
240V ON WHITE OF F.S.
YES
NO
CHECK WATER CIRCULATION & FLOW SWITCH
CHECK WIRING FROM SAFETY STAT TO FLOW SWITCH
FAN RUNNING
YES
NO
SPARK AT ELECTRODE
YES
NO
IGNITION
C
NO
YES
CHECK/ REPLACE FAN
YES
240V AT FAN
NO
240V AT TERM. 4 ON E.B.
NO
CHECK WIRE FROM E.B. TO MODE SWITCH
YES
240V AT BLUE/BLACK WIRE ON P.D.S
YES
240V AT RED/BLACK WIRE ON P.D.S
NO
YES
CHECK WIRING BETWEEN P.D.S AND FAN
NO
240V AT TERM. 7 ON E.B.
YES
CHECK WIRING BETWEEN P.D.S & E.B.
NO
REPLACE IGNITION BOX
RESET BUTTON LIT
NO
YES
PUSH TO RESET
RESET BUTTON LIT
NO
RESTART
YES
CHECK/ REPLACE RESET BUTTON
240V AT PURPLE WIRE ON P.D.S
YES
B
NO
REPLACE P. D. SWITCH
LOCKOUT AFTER IGNITION
NO
END
YES
CHECK SENSING ELECTRODE AND LEAD
SENSING ELECTRODE AND LEAD OK
YES
REPLACE IGNITION BOX
NO
REPLACE SENSING ELECTRODE

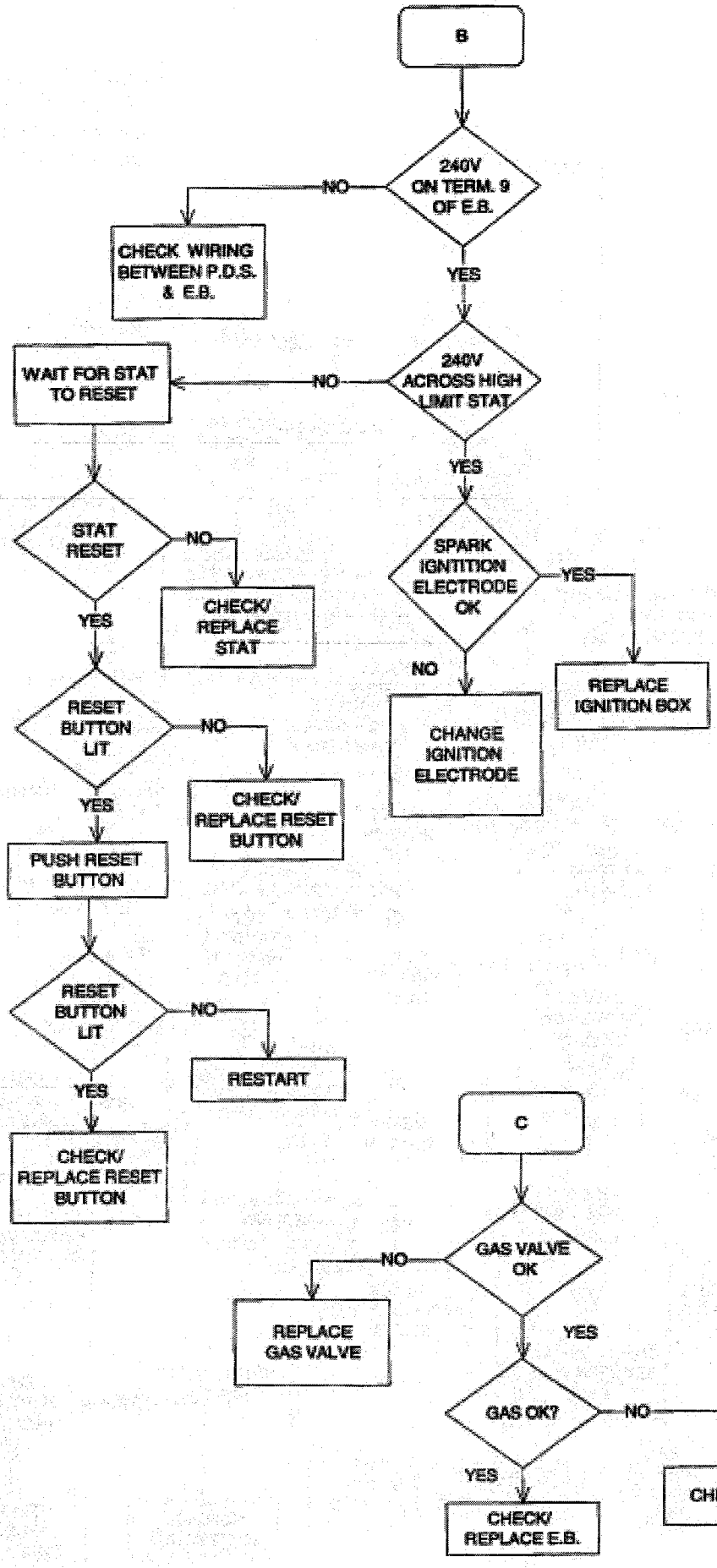
B
240V ON TERM. 9 OF E.B.
NO
CHECK WIRING BETWEEN P.D.S. & E.B.
YES
240V ACROSS HIGH LIMIT STAT
NO
WAIT FOR STAT TO RESET
YES
STAT RESET
NO
CHECK/ REPLACE STAT
YES
SPARK IGNITION ELECTRODE OK
YES
REPLACE IGNITION BOX
NO
CHANGE IGNITION ELECTRODE
RESET BUTTON LIT
NO
CHECK/ REPLACE RESET BUTTON
YES
PUSH RESET BUTTON
RESET BUTTON LIT
NO
RESTART
YES
CHECK/ REPLACE RESET BUTTON
C
GAS VALVE OK
NO
REPLACE GAS VALVE
YES
GAS OK?
NO
CHECK GAS
YES
CHECK/ REPLACE E.B.

SECTION 10 APPENDIX

Instructions for:

(A) **Fitting Vokera 24 hour time switch** (part no. 201)
Fitting Vokera digital 7 day time switch (part no. 202)

(B) **Fitting Vokera 2 channel programmer (24 hr)** (part no. 099)
Fitting Vokera 2 channel programmer (7 Day) (part no. 081)

(C) **Wiring to external time switches, room thermostats and frost thermostats.**

(D) **Wiring to 'Y' plan or 'S' plan installations.**

A. INSTALLATION OF VOKERA TIME SWITCHES (24 HOUR AND 7 DAY).

Remove the clock aperture blanking plate (1) (fig. 1) by squeezing the four lugs on the rear of the plate together and push the plate out.

Push out the centre of the blanking plate to leave a circular hole to which the clocks can be fitted.

Remove the clock from its box.

Wire the clock as shown in fig. 4.

Insert the clock into the aperture from the back of the control panel. Push the mounting bezel through the front panel and secure to the clock using the four screws provided.

Connect the other ends of the wires to the main controls terminal block as detailed below.

Red/White: Connect to the output terminal block marked L.

Blue: Connect to the output terminal block marked N.

Red/Black: Connect to the controls terminal block marked 1.

FOR INTERNAL CLOCK ONLY

White: Connect to the controls terminal block marked 3, remove the link wire connected between terminals 1 - 3.

FOR INTERNAL CLOCK AND ROOM STAT

White: Connect to the controls terminal block marked 2, remove the link wire between terminals 1 - 3 and connect the room thermostat between terminals 2 - 3.

ROOM THERMOSTAT ONLY

Remove the loop between terminals 1 - 3 and connect the room thermostat as fig. 3.

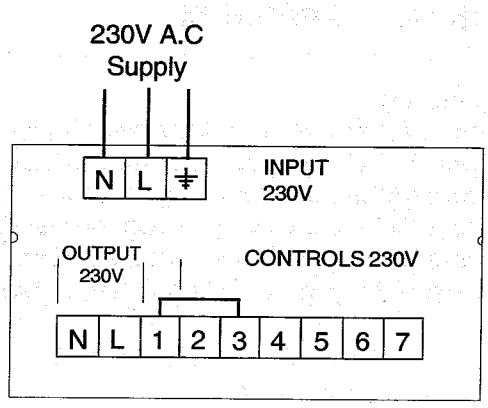

Fig. 2

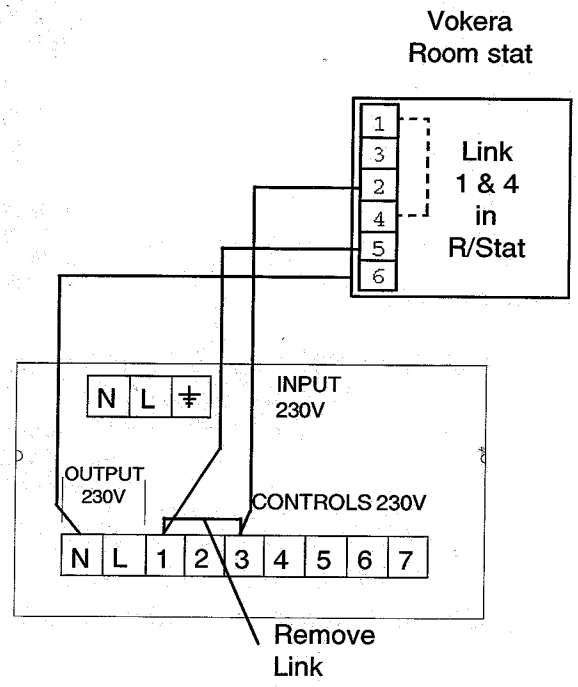

Fig. 3

Fig. 1

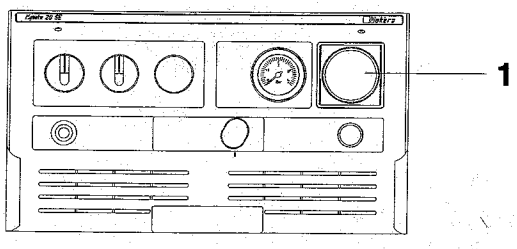

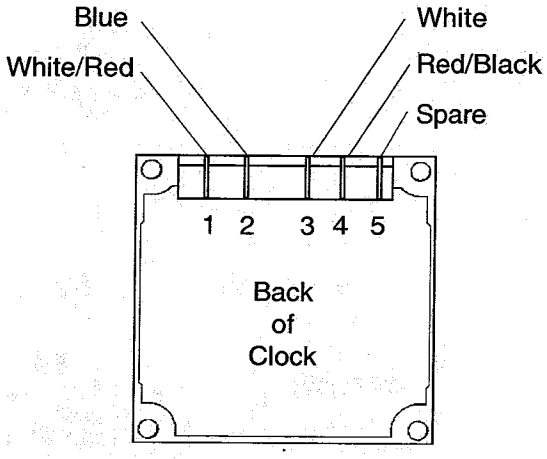

Fig. 4

B. INSTALLATION OF VOKERA 2 CHANNEL PROGRAMMER (24 HOUR & 7 DAY).

Remove the clock aperture blanking plate (1) Fig. 1. by squeezing the four lugs on the rear of the plate together and push the plate out.
Remove the clock from its box.
Wire the clock as shown in fig. 5.
Insert the clock into the aperture from the front of the control panel fig. 6.
Connect the other ends of the wires to the main controls terminal block as detailed below. See fig. 5.

Brown: Connect to terminal marked L on the controls terminal block.
Blue: Connect to terminal marked N on the controls terminal block.
Red: Connect to terminal marked 4 on the controls terminal block.
Pink: Connect to terminal marked 5 on the controls terminal block.
Grey: Connect to terminal marked 6 on the controls terminal block.
Purple: Connect to terminal marked 7 on the controls terminal block.
Remove the loop between terminals 1 & 3 on the controls terminal block. See section 10 (C) for 'S' & 'Y' plan wiring details.

Fig. 6

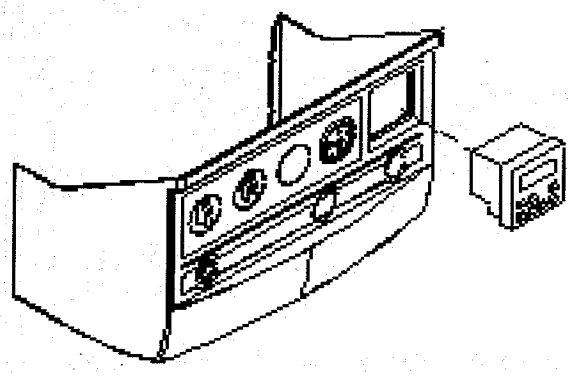

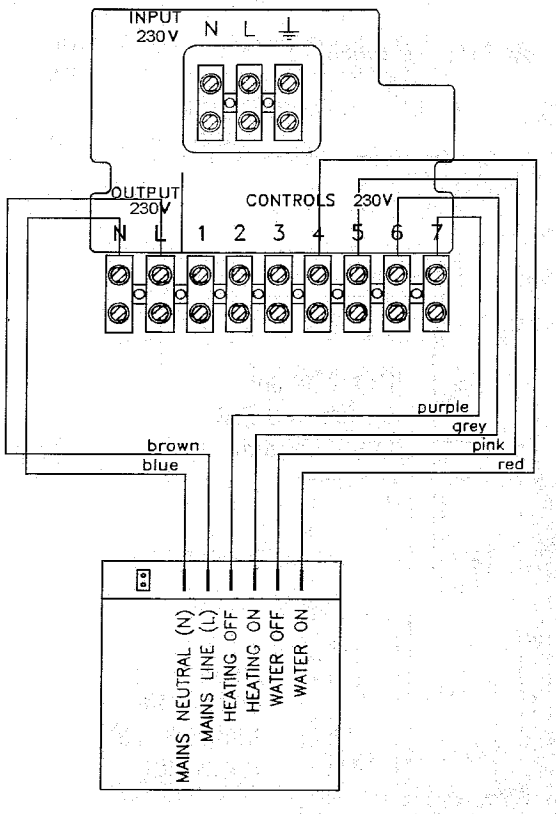

Fig. 5

C: Wiring to External Time Switches and Thermostats.
(i) General Schematic Diagram.

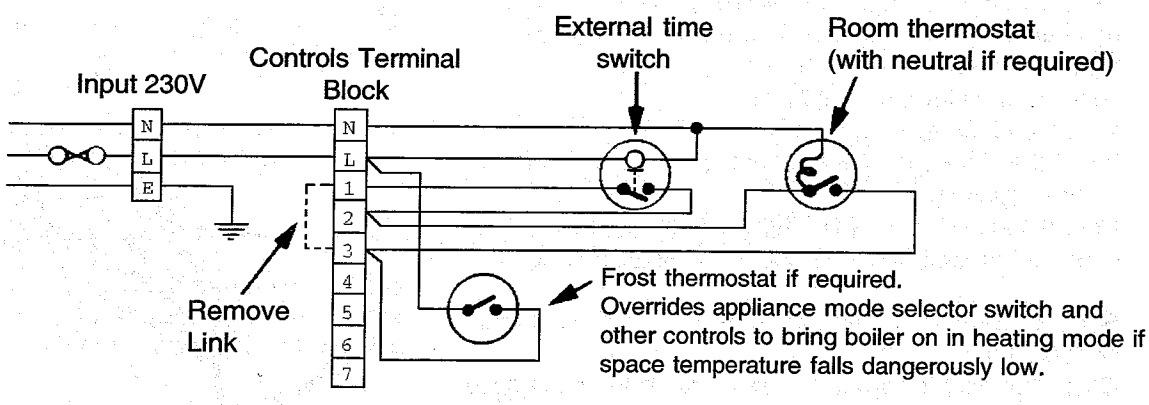

(ii) Time switch and Vokera room thermostat

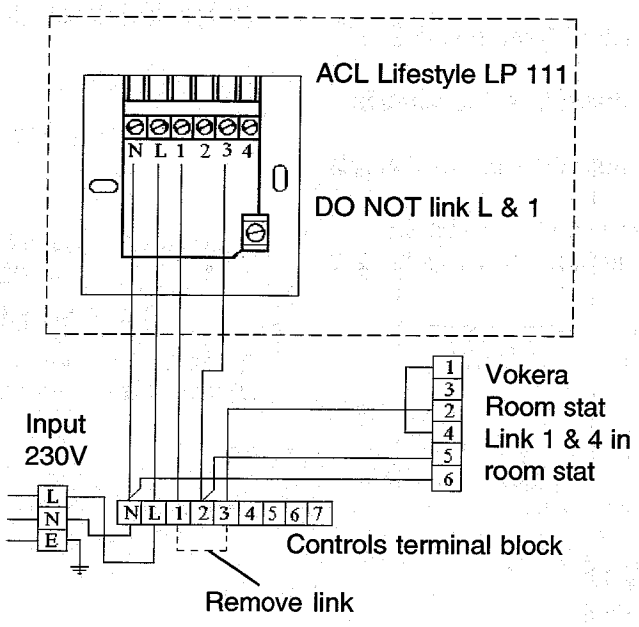

(iii) Randall time switch and Vokera room thermostat

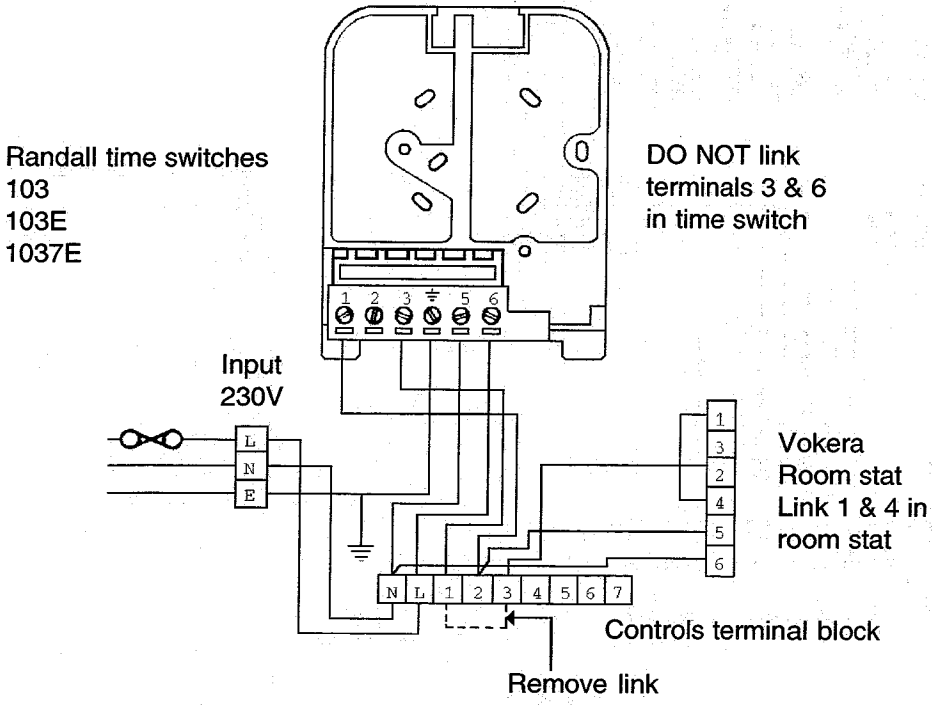

(D) Wiring to 'Y' & 'S' Plan Installations using the Vokera 2 channel programmer.

(i) 'Y' Plan

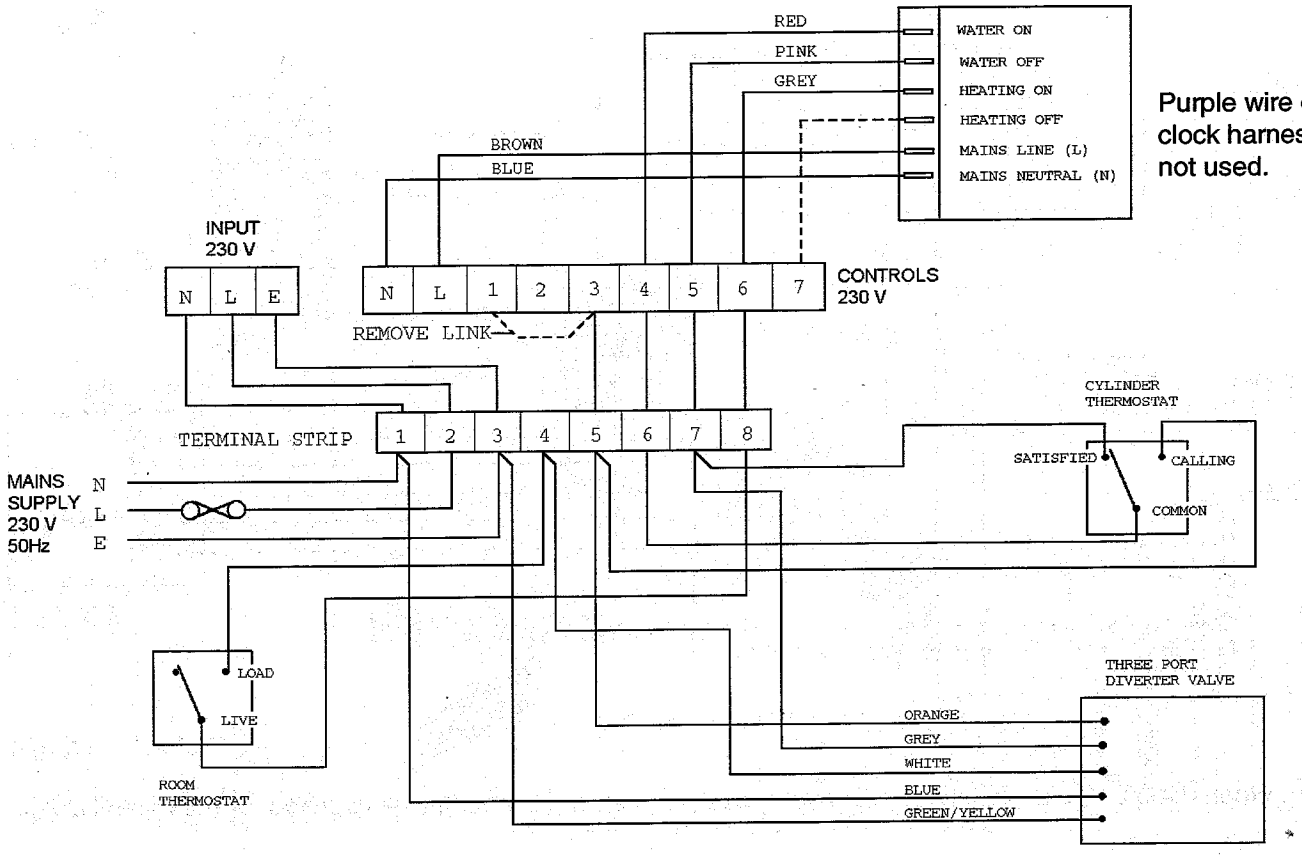

Purple wire on clock harness not used.

(ii) 'S' Plan

Pink and purple wires on clock harness not used with sprung return motorised valves. Use only if power on and power off motorised valves are used (not shown).

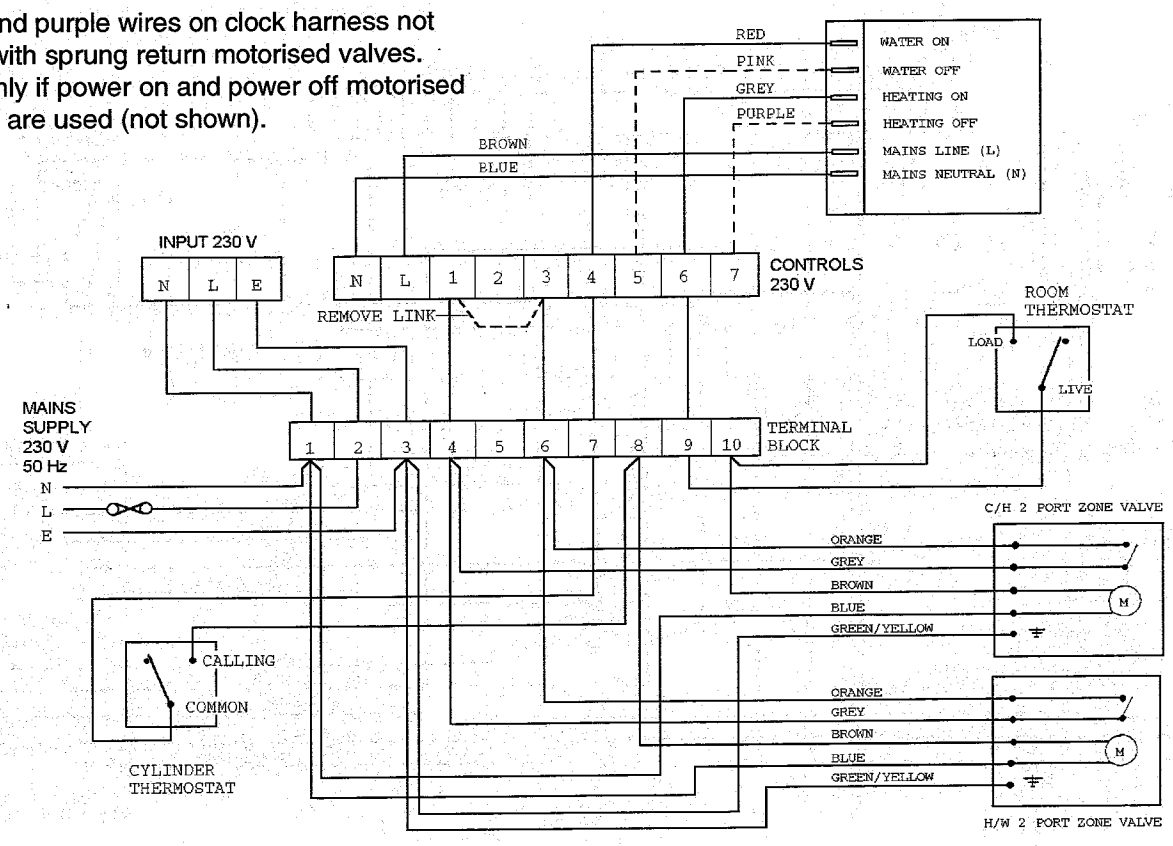

Wiring to 'Y' and 'S' plan installations using an external programmer

(i) Y Plan

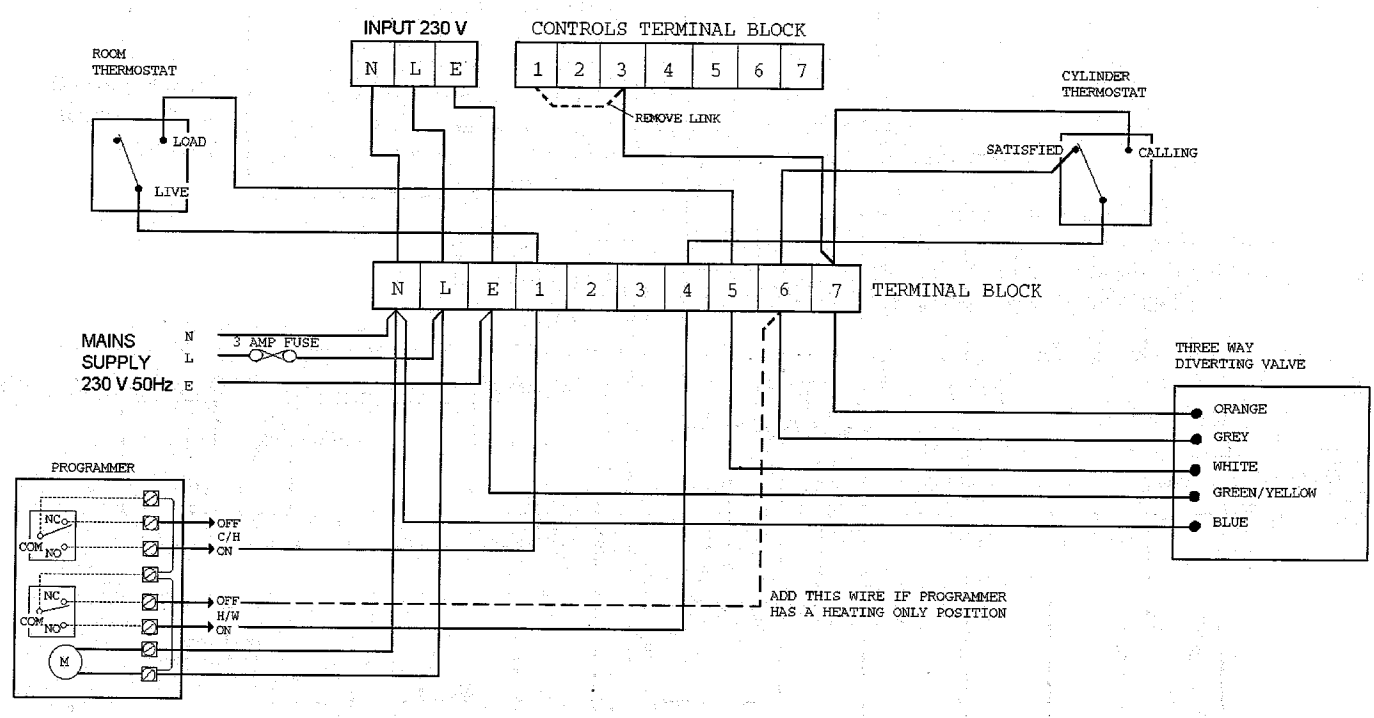

NOTE: When using a 'Y' plan installation the appliance mode selector switch will be overriden by the control circuit.

(ii) S Plan

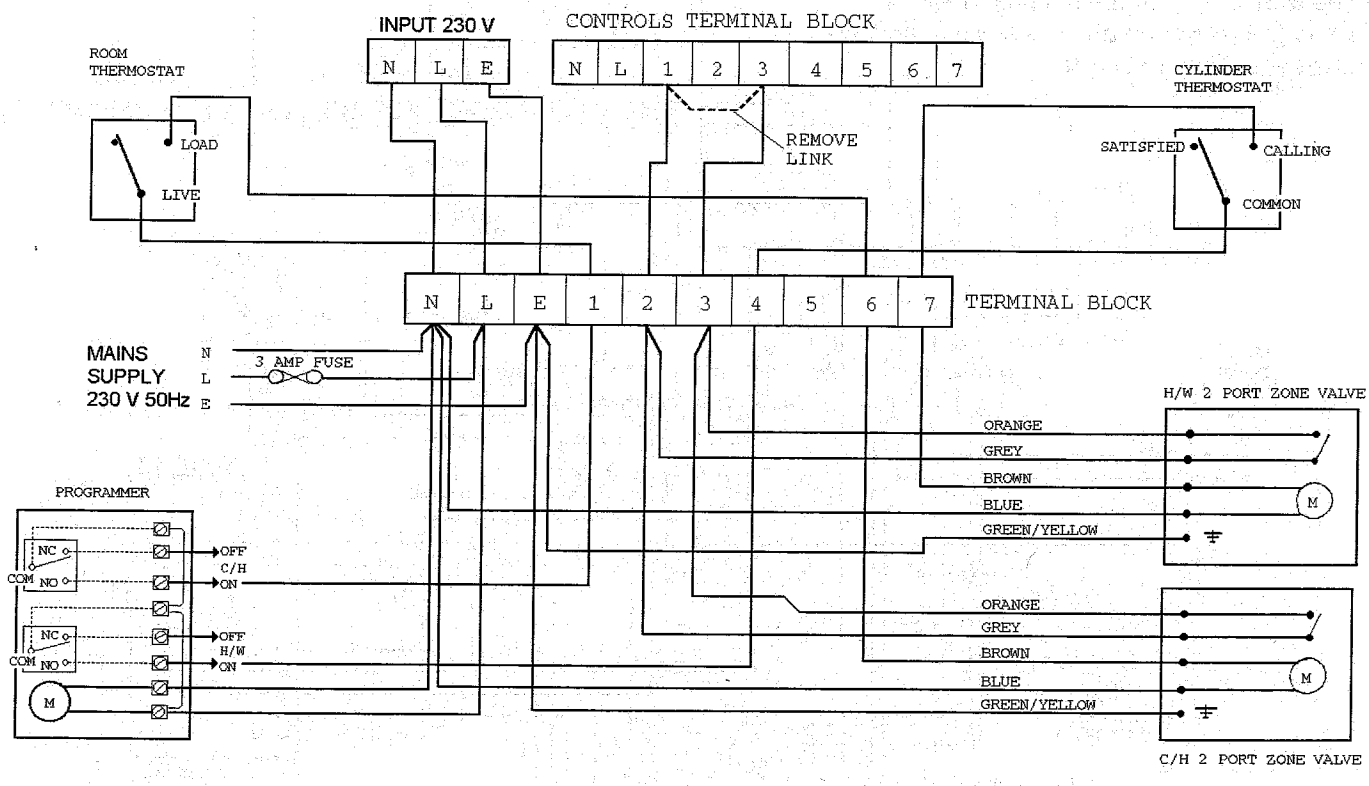

EXPLODED DIAGRAMS Fig. 37

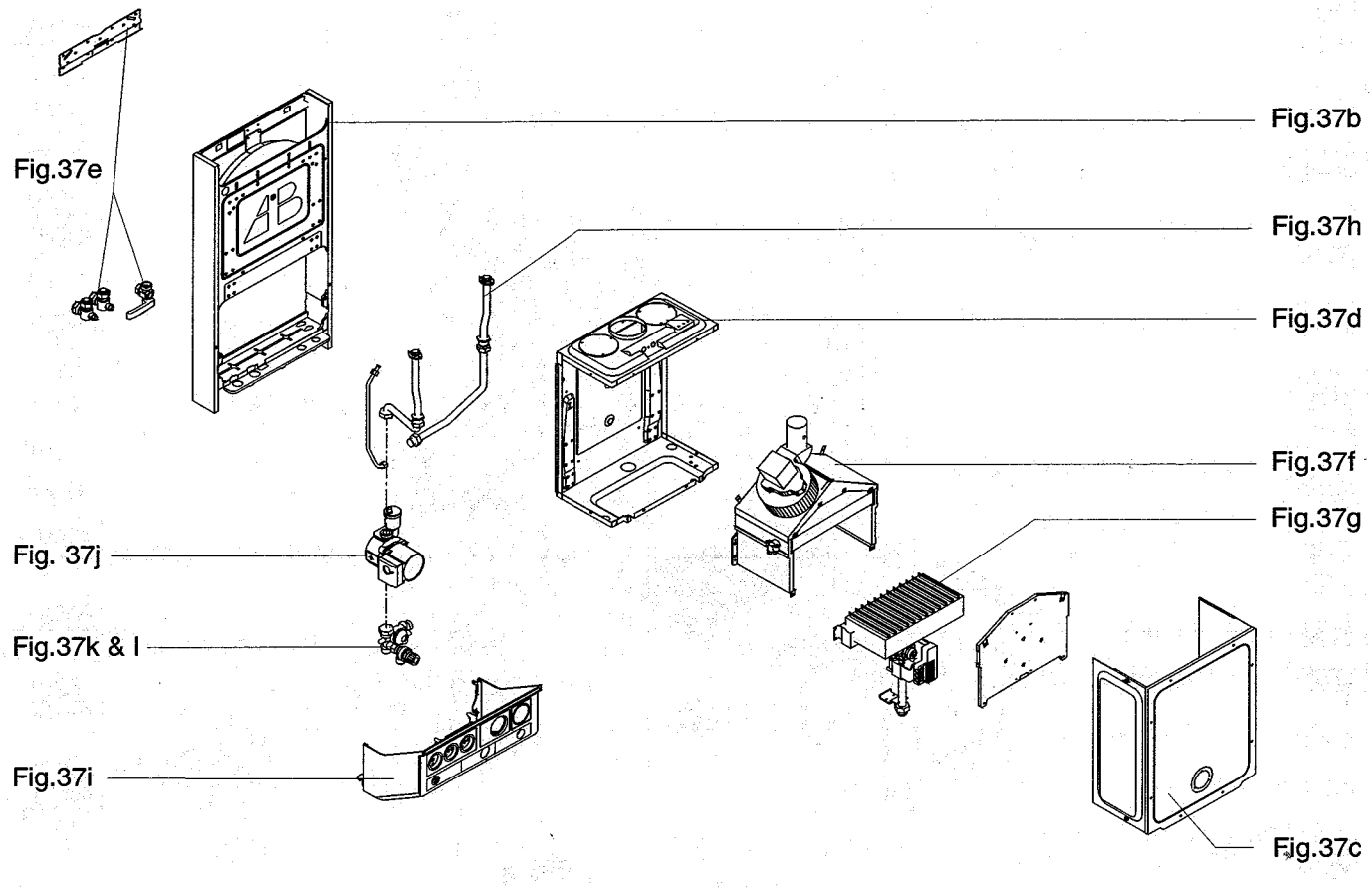

Fig. a

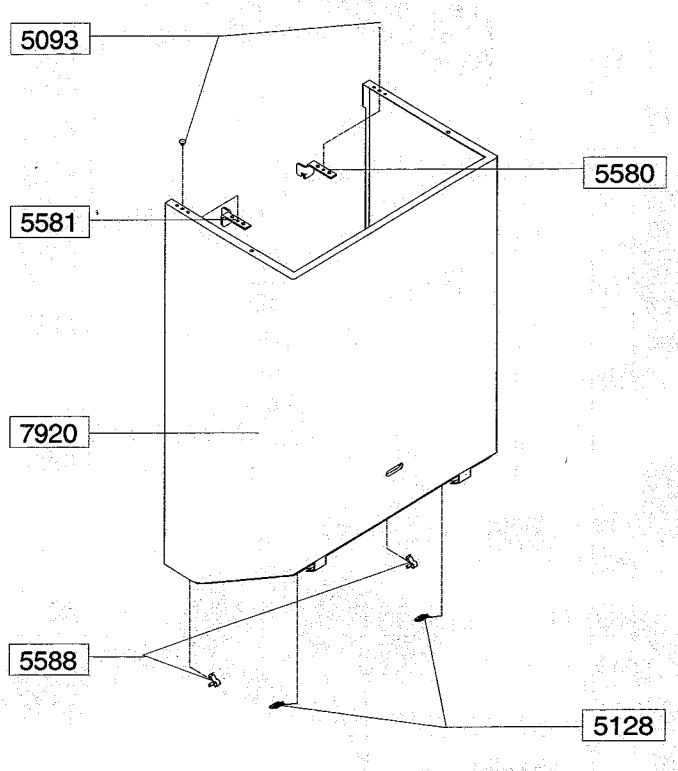

Fig. b

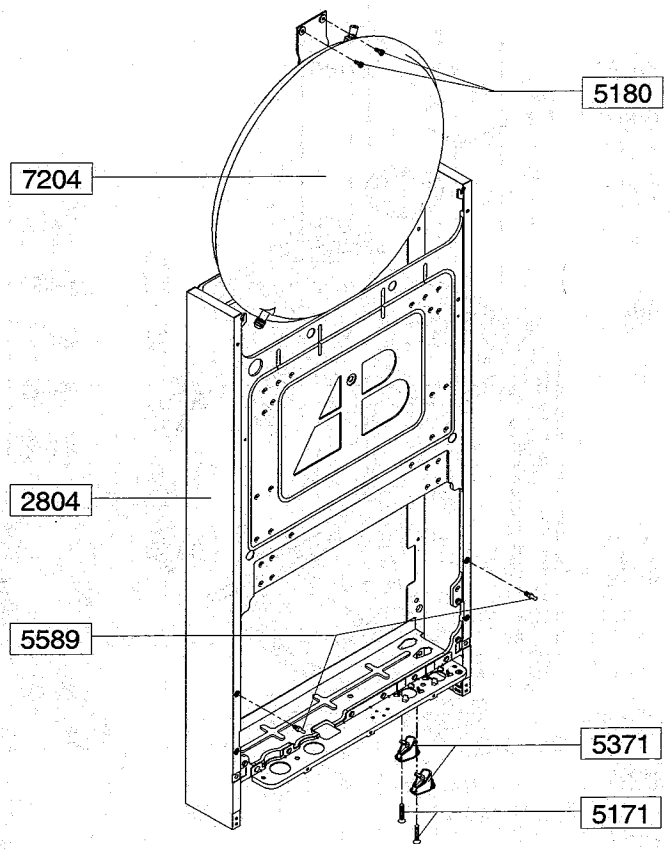

Fig. c

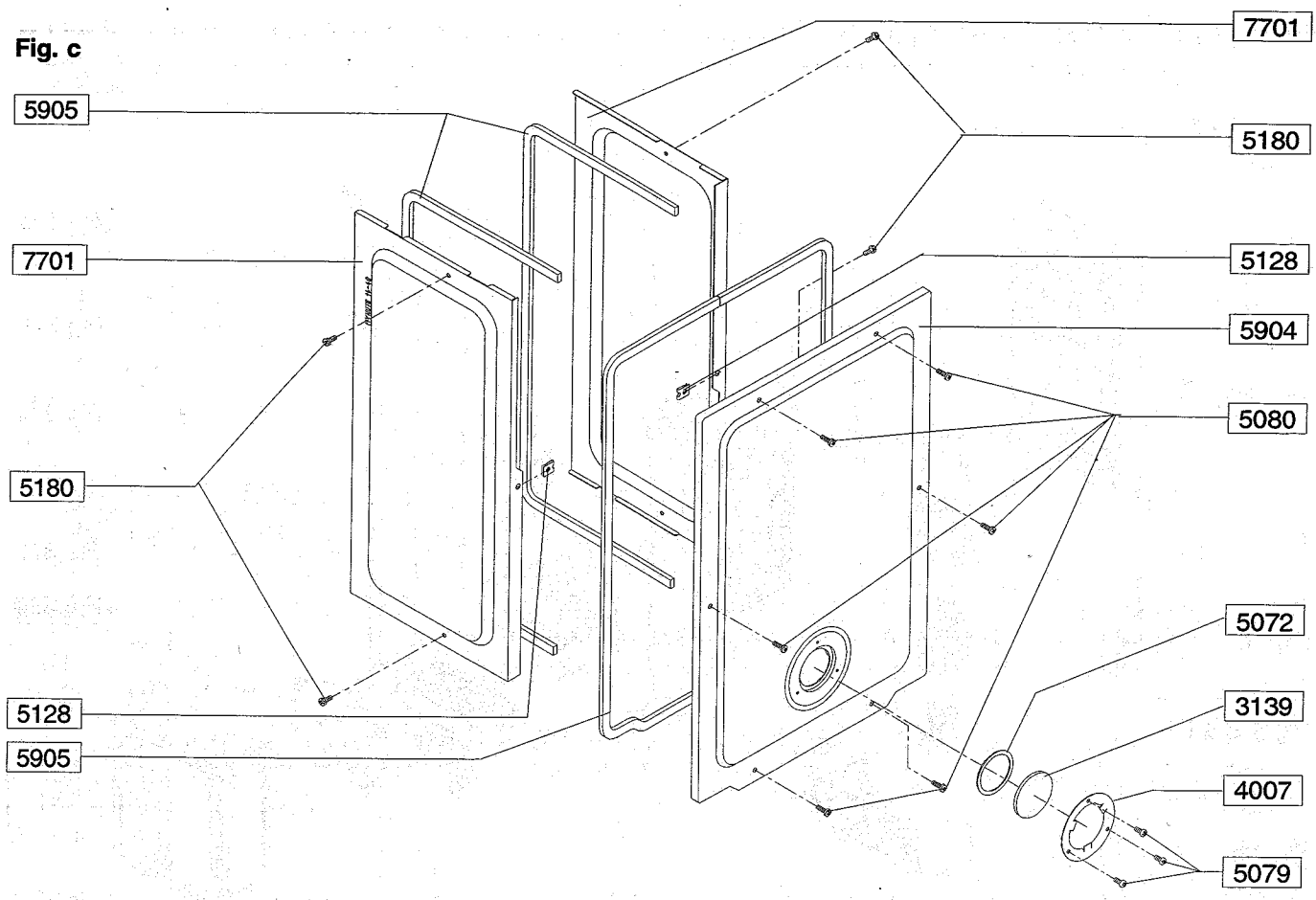

Fig. d

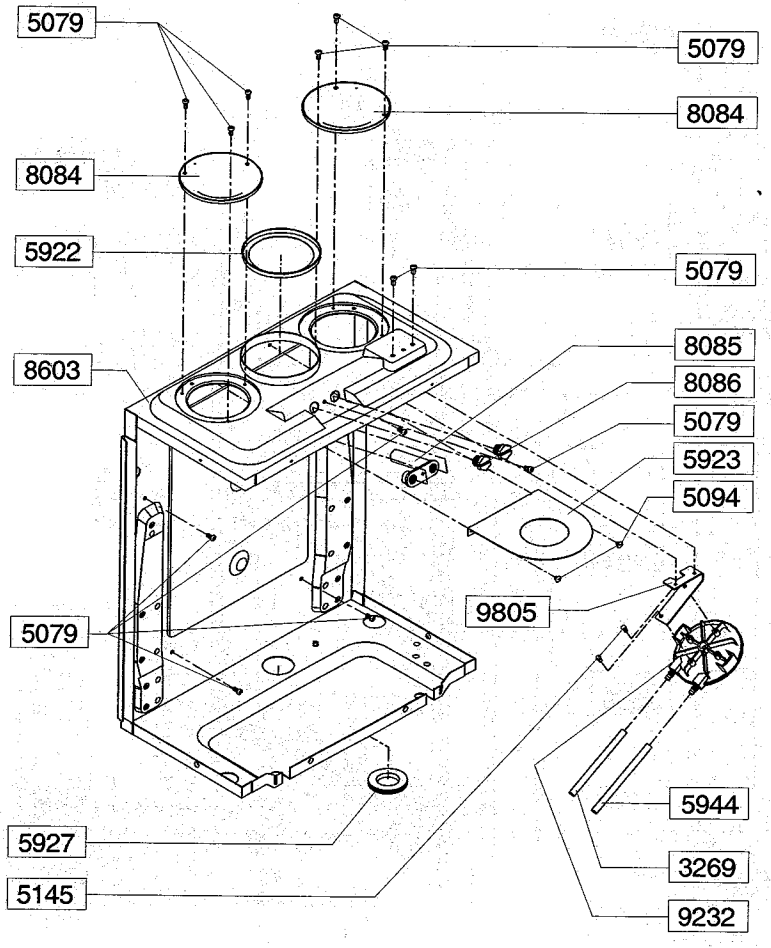

Fig. e

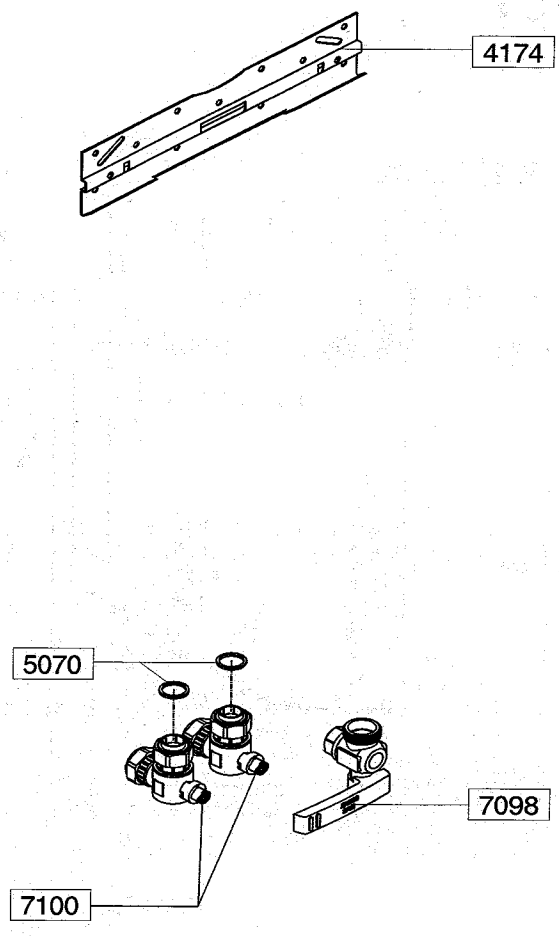

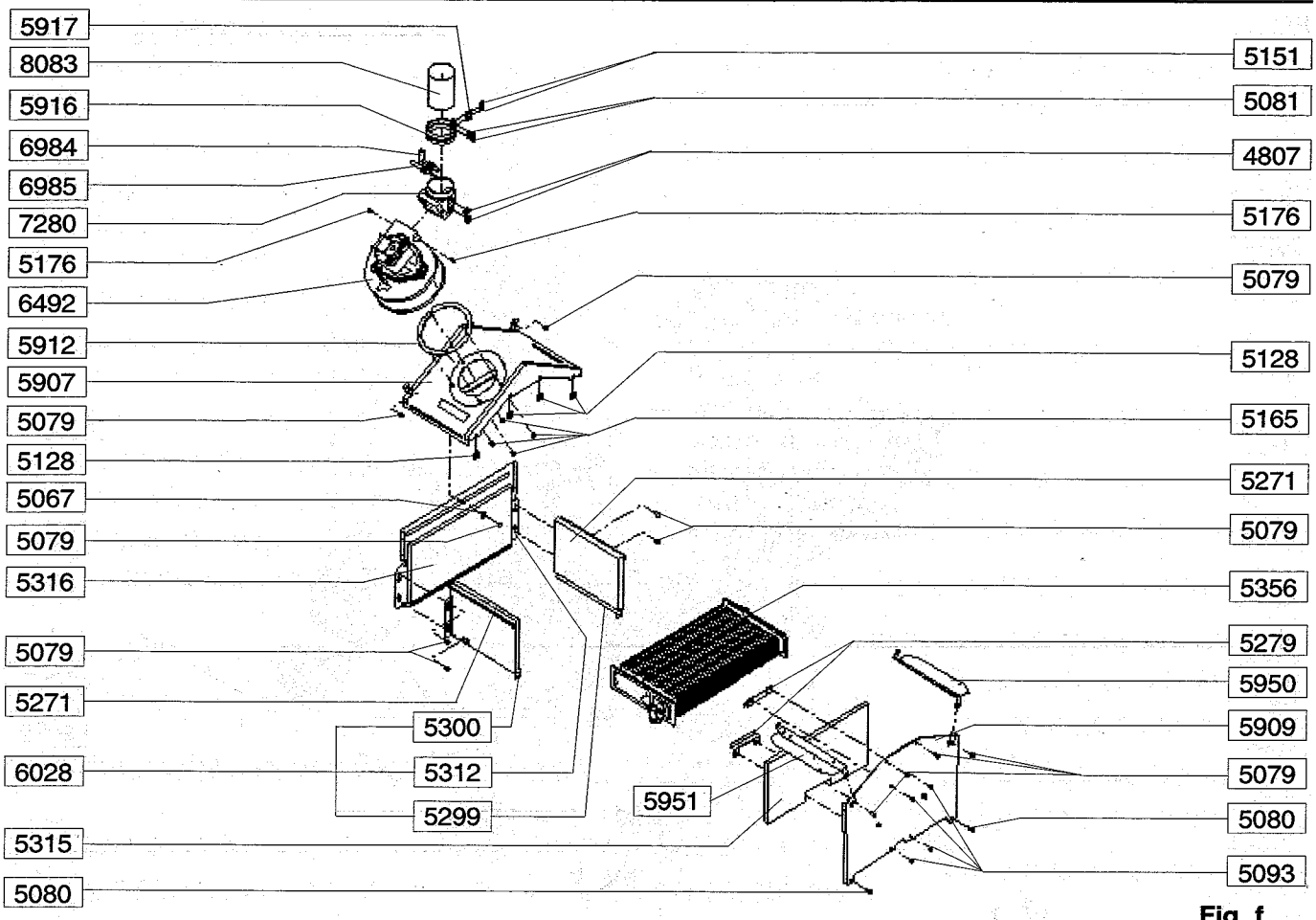

Fig. f

Fig. g

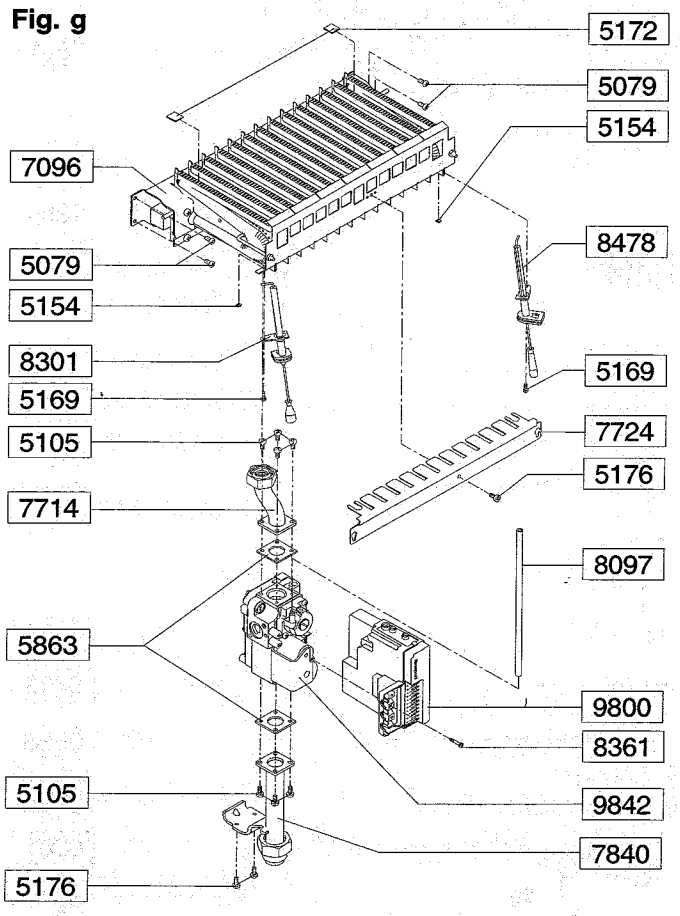

Fig. h

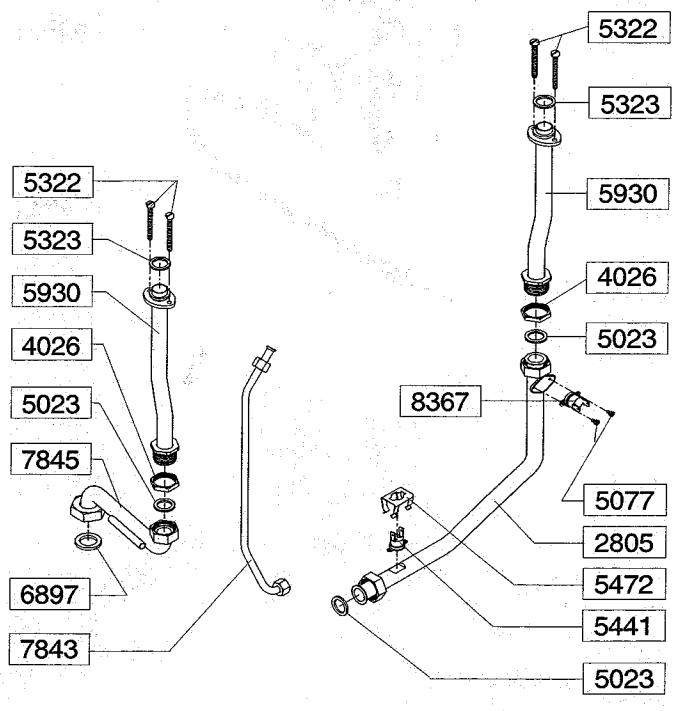

Fig. i

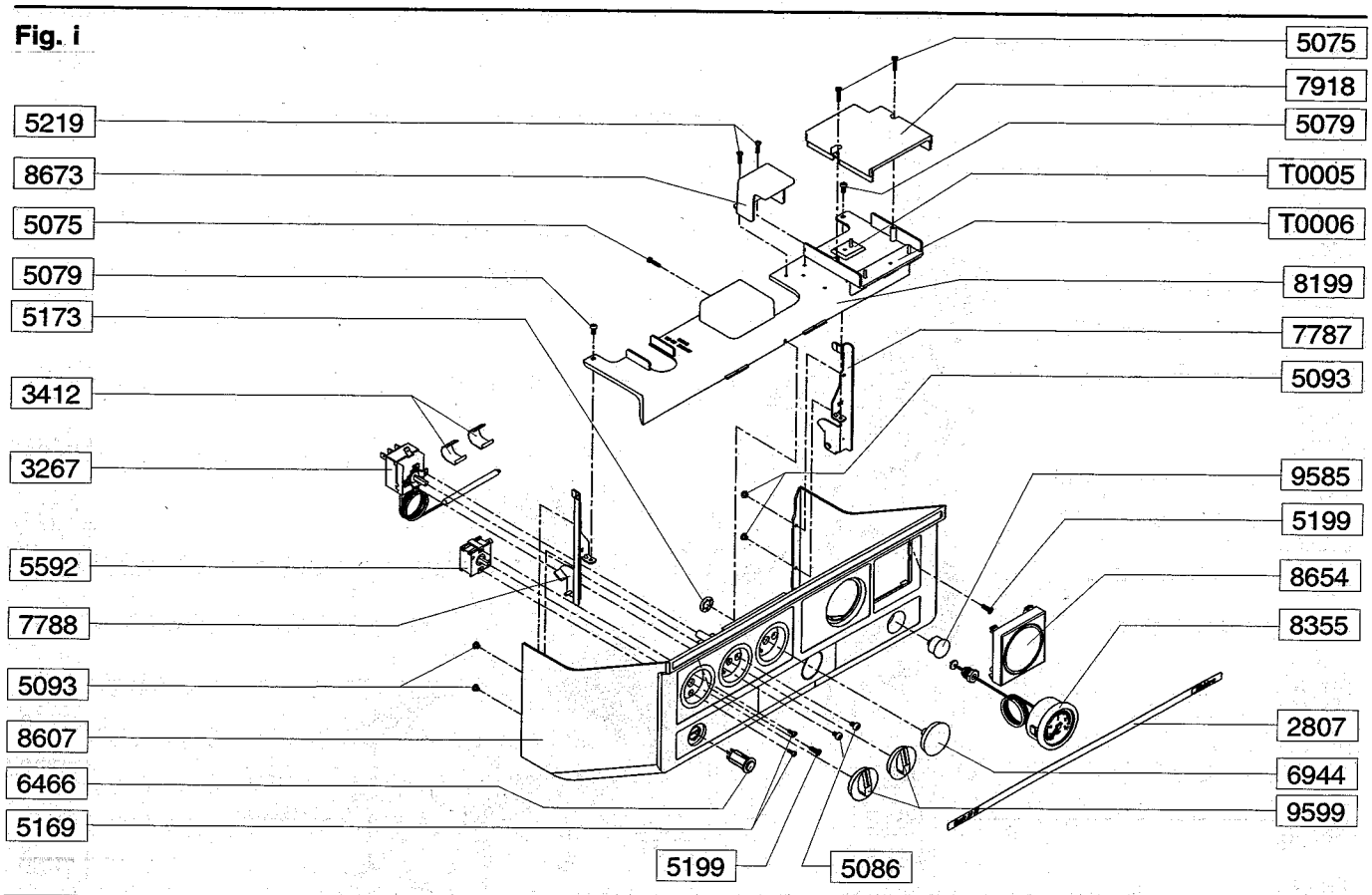

Fig. j

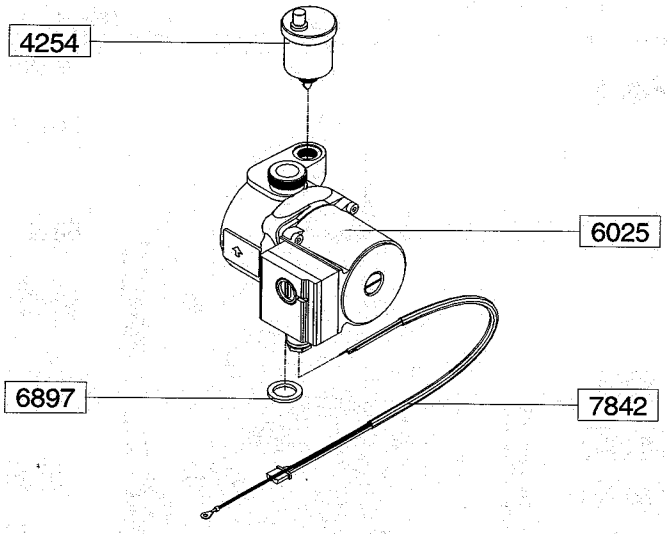

Fig. k

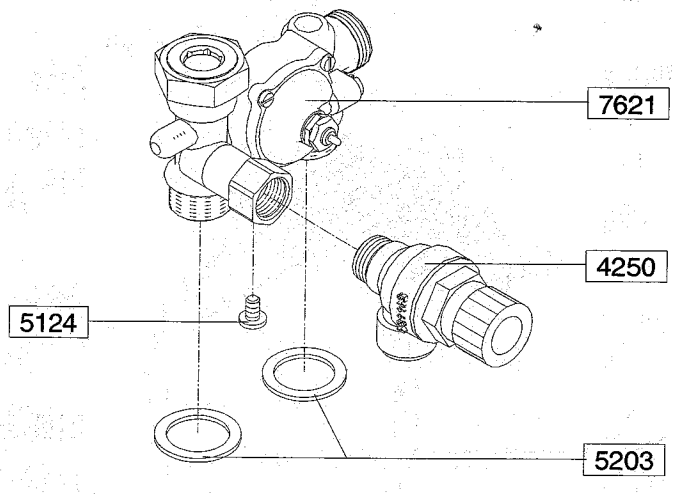

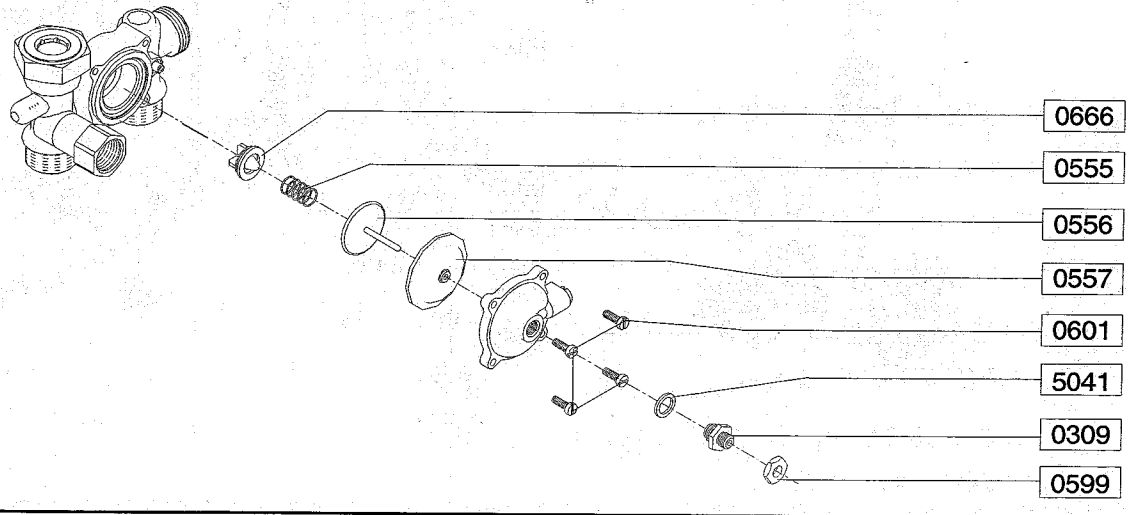

Code	G.C. No.	Description
0557	333 941	Flow Switch Diaphragm
3267	333 947	Boiler Thermostat
4250	333 772	Safety Valve
4254	333 722	Automatic Air Vent
4302	333 773	Single Microswitch
5356	301 023	Main Heat Exchanger
5441	301 027	Safety Thermostat
5592	370 408	Mode Selector Switch
6025	379 297	Pump
6492	301 213	Fan
7096	301 219	Main Burner

Fig.38

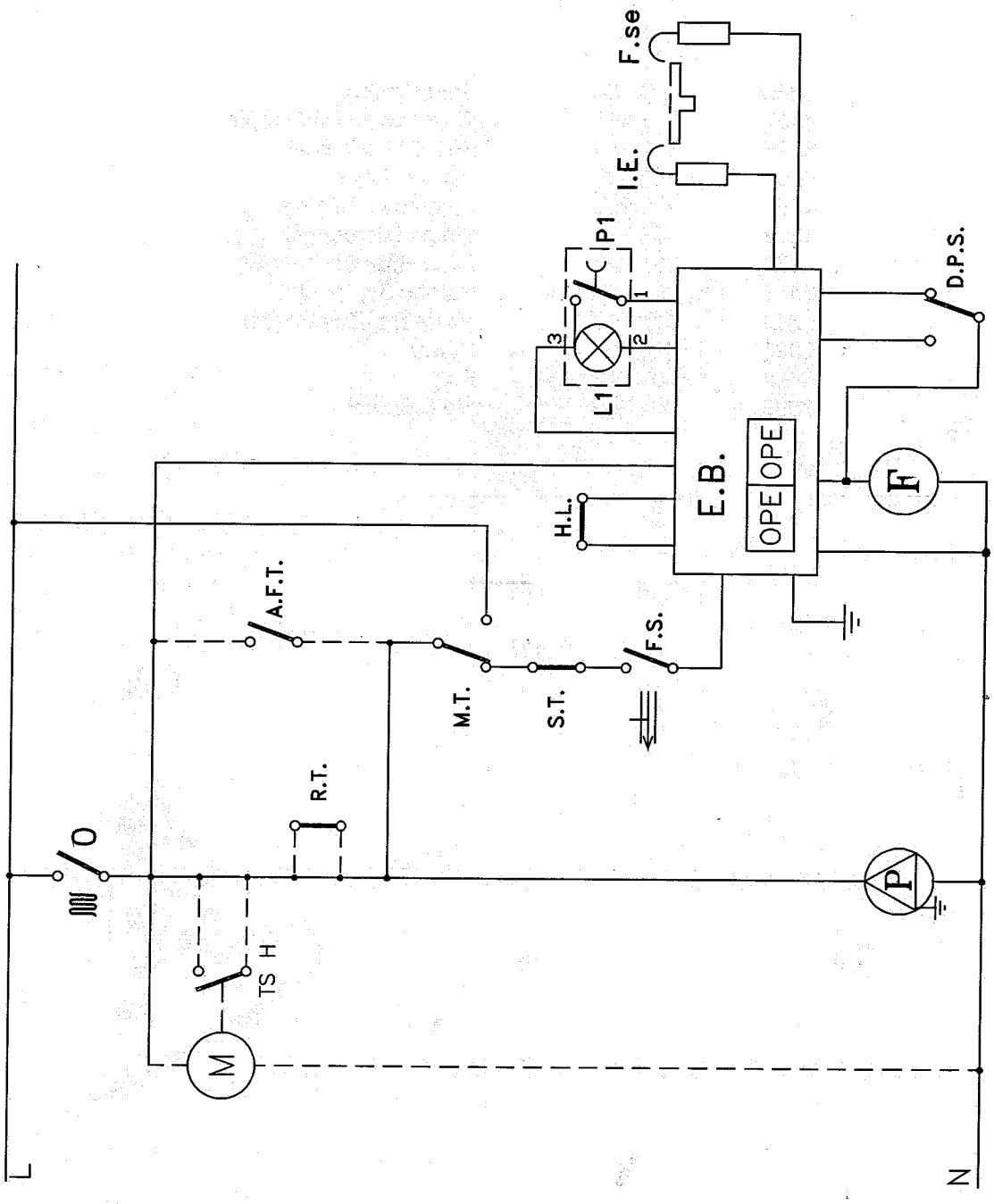

KEY

MT	Boiler Thermostat	HL	High Limit Thermostat
ST	Safety Thermostat	F	Fan Assembly
FS	Flow Switch	P	Pump
DPS	Air Pressure Switch	RT	Room Thermostat (if fitted)
EB	Ignition Control Box	TSH	Timeclock (if fitted)
OPE	Gas Valve Operator	AFT	Frost Thermostat (if fitted)

Fig. 39

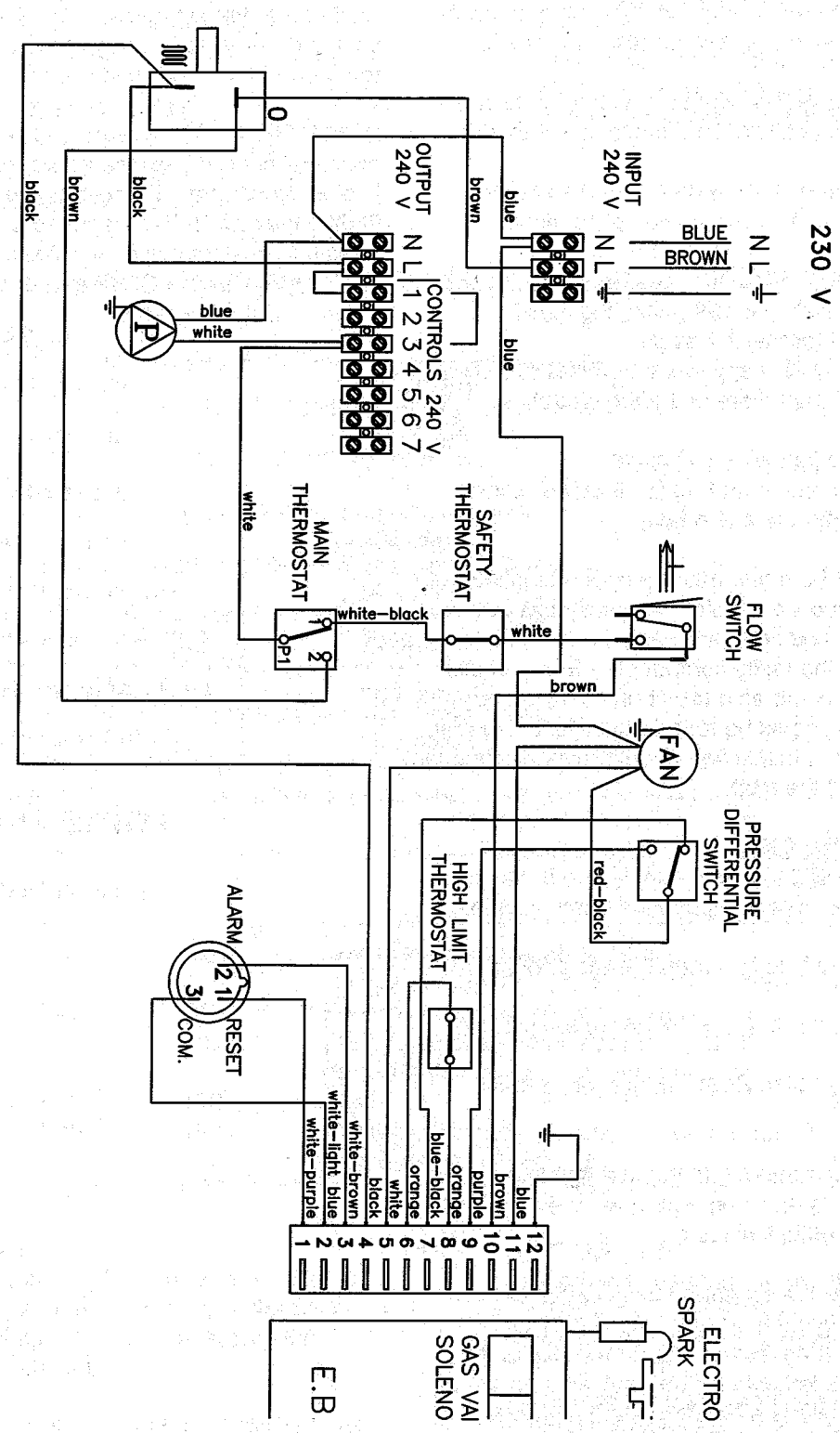
230 V
N L
BLUE
BROWN
INPUT
240 V
N L
blue
brown
blue
OUTPUT
240 V
N L
CONTROLS 240 V
1 2 3 4 5 6 7
black
brown
black
blue
white
P
FLOW
SWITCH
SAFETY
THERMOSTAT
MAIN
THERMOSTAT
white
white–black
white
brown
FAN
PRESSURE
DIFFERENTIAL
SWITCH
red–black
HIGH LIMIT
THERMOSTAT
ALARM
RESET
COM.
white–light blue
white–purple
white–brown
black
orange
white
blue–black
orange
purple
brown
blue
E.B.
GAS VAI
SOLENO
ELECTRO
SPARK

PRELIMINARY ELECTRICAL SYSTEM CHECKS

A. EARTH CONTINUITY CHECK - appliance must be electrically disconnected - meter set on Ω (ohms) x 1 scale and adjust zero if necessary.

a) Test leads from any appliance earth point to earth pin on plug - resistance should be less than 0.1 Ω (ohm).
If the resistance is greater than 0.1 Ω (ohm) check all earth wires for continuity and all contacts clean and tight.
If resistance of earth is still grater than 0.1 Ω (ohm) then this should be reported to your supervisor.

B. SHORT CIRCUIT CHECK - appliance electrically disconnected, all switches ON (including stats) -
a) meter set on Ω (ohms) x 1 scale.
Test leads fom L to N in appliance terminal strip/block - if meter reads 0 then there is a short circuit.

b) meter set on Ω (ohms) x 100 scale
Repeat test with leads from L to E. If meter reads less than ∝ (infinity) there is a fault.

NOTE - Should it be found that the fuse has failed but no fault is indicated - a detailed continuity check (i.e. by disconnecting and checking each component) is required to trace the faulty component. It is possible that a fault could occur as a result of local burning/ arcing but no fault could be found under test. However, a detailed visual inspection should reveal evidence of burning around the fault.

C. POLARITY CHECK
Appliance connected to mains supply and meter set on 300V ac scale. Test at appliance terminal strip:-

a) Test leads from L to N - meter reads approx 230V ac
b) Test leads from L to E (⏚) - meter reads approx 230V ac
c) Test leads from N to E (⏚) - meter reads from O-15V ac*

Thus the terminal marked L is the live terminal. If the low* Vac reading is given on terminals other than N to E (⏚) there is an electrical fault.

Repeat the test at the appliance plug/inlet spur to check the wiring system up to the appliance and rectify any fault. If necessary repeat the test at the supply system socket/spur - if the fault also occurs at this stage then there is a house system fault which requires attention by the ELECTRICITY AUTHORITY. The customer should be warned not to use the appliance until this examination has been carried out.

D. RESISTANCE TO EARTH CHECK
Appliance must be disconnected from mains supply and meter set on Ω (ohms) x 100 scale. **All** switches, including stats, ON - Test leads from L to E - if meter reads other than infinity (∝) there is a fault which should be isolated. A detailed continuity check is required to trace the faulty component.

IMPORTANT - This series of checks are the first electrical checks to be carried out during a fault finding procedure. On completion of the service/fault finding task which has required the breaking and remaking of electrical connections then the checks - A. Earth Continuity. C. Polarity and D. Resistance to Earth - must be repeated.

APPENDIX L.P.G INSTRUCTIONS

1.0 PERFORMANCE:

NOMINAL HEAT INPUT
Max. 31kW (105,800Btu/h)(net)
Min. 22.3kW (76,100Btu/h)(net)
Max. 34kW (116,040Btu/h)(gross)
Min. 24.7kW (84,300Btu/h)(gross)
Designed temperature rise 20°C

NOMINAL HEAT OUTPUT
Max. 28.0kW (95,563 Btu/h)
Min. 19.8kW (67,576 Btu/h)
Max. flow temperature 85°C

BURNER PRESSURE
Max. Pressure: 36.0mbar
Min. Pressure: 10.5mbar

WORKING PRESSURES HEATING SYSTEM
Maximum 1.5bar/15m w.g./50ft w.g.
Minimum 0.5bar/5m w.g./16ft w.g.
Safety valve setting 3bar/30m/102ft

FLOW RATES
Minimum central heating flow rate through the appliance 350 litres/hour (1.28 gals/min.)

1.1 GAS RATES

Min. Gas Rate	3.46 Litres/h
Max. Gas Rate	4.80 Litres/h

1.2 BURNER DETAILS

Main Burner	Polidoro NP14
Main Burner Injectors	14 x 0.77
Burner Pressure Max. Rate	36mbar
Burner Pressure Min. Rate	20.8 mbar
Burner Pressure Soft Light	16.7mbar

GENERAL REQUIREMENTS

2.0 RELATED DOCUMENTS

BS 6891		1988	Low pressure installation pipes
BS 6798		1987	Boilers of rated input not exceeding 60kW
BS 5449	Part 1	1990	Forced circulation hot water systems
BS 5546		1979	Installation of gas hot water supplies for domestic purposes (2nd family gases)
BS 5440	Part 1	1990	Flues
BS 5482	Part 3	1979	Domestic Butane & Propane Gas burners in permanent dwellings

3.0 GAS SUPPLY

A gas supply should be connected to the boiler by a competent L.P.G. installer and should be of sufficient size to supply the boiler at its maximum output.

An existing supply should be checked by the installer or L.P.G. supplier to ensure that it can deal with the rate of gas supply required for all the appliances when they are in use at the same time.

4.0 AIR SUPPLY

Recommendations for air supply are detailed in BS 5440:2:1989. The following notes are intended for general guidance.

The room sealed, fan flued boiler does not require a permanent air vent for combustion air supply.

Where installed in a cupbaord or compartment, ventilation is not required for cooling.

5.0 COMMISSIONING

5.1 GAS SUPPLY INSTALLATION

5.1.1 Inspect the entire installation including the meter, test for soundness and purge, all as described in BS 5482:3:1979.

5.2 CHECK BURNER PRESSURE

5.2.1 The heat inputs for high and low gas rates are factory set to the maximum values given in section 3.6 but it is necessary to check/adjust this when commissioning the appliance.
The maximum heat input may be reduced by a simple adjustment to suit the system load.

5.2.2 Turn off the main electrical supply. Gain access to the interior as instructed in clause 5.7.2.

5.2.3 Locate the main burner pressure test point fig. 20 and slacken the screw half a turn in an anti clockwise direction. Attach a suitable pressure gauge. Turn on the appliance for central heating & adjust the thermostat knob (17) to its maximum setting.

5.2.4 The pressure reading for maximum output should be :

36.0mbar.
(Plus or minus 3.6mbar.)

If the pressure is wrong or if it is required lower it can be adjusted as follows:

Turn off electrical supply.
Referring to fig. 40, remove the dust cap on the gas valve regulator by unscrewing in a counter clockwise direction.

Turn on electricity supply and adjust the thermostat (17) to its maximum setting.

The boiler will now light at full flame, if not screw the regulator slowly clockwise until the burner lights.

Adjust the regulator screw until the correct pressure is obtained on the gauge.

Refit the dust cap ensuring the reading does not change.

Once this pressure has been fixed it should be indelibly recorded on the label provided and stick it next to the data badge. This is to ensure that the burner can be reset when any service operation involves alteration of the burner settings.

5.3 CHECKING THE SOFT LIGHT

5.3.1 To ensure correct cross ignition the gas valve opens momentarily at a reduced gas pressure, then opens to the preselected gas pressure. This initial opening of the gas valve is known as soft light.

5.3.2 The soft light pressure is factory set, check burner performance at this pressure observing burner ignition & flame characteristics. The burner should ignite properly without flashback and all injectors should remain lit. Cycle burner several times (wait 15 seconds between each cycle to allow servo system to reset).

5.3.4 If any ignition irregularities were noted during this test period, the soft light will need adjusting as follows:

1. Turn off electrical supply.
2. Referring to fig. 20, remove the dust cap on the soft light regulator by unscrewing in a counter clockwise direction.
3. Turn the adjustment screw one step in the direction "MAX" to increase or in the direction "MIN" to decrease the soft light pressure.
4. After each adjustment of the regulator, turn on the electricity supply and recheck burner ignition. When the required level is achieved, replace the dust cap by screwing in a clockwise direction.

NOTE: When using L.P.G. start with the soft light regulating screw turned fully to "MAX".

Fig. 40

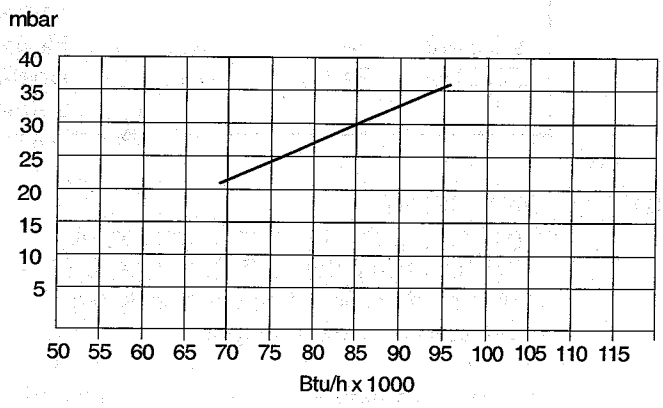

Cod. 10022255 - 19/01 - Ed. 1

Vokèra

PUTTING THE ACCENT ON QUALITY

Vokèra Ltd.
Web: www.vokera.co.uk

Southern Region: Morson Road, Enfield, Middlesex EN3 4NQ. Sales: 0181 216 6300. Fax: 0181 805 6320.
Parts: 0181 216 6310. Technical Helpline: 0181 216 6320. Customer Services: 0870 333 0220.
Email: enfield.spares@vokera.co.uk

Northern Region: Stubs Beck Lane, West 26 Business Park, Whitehall Road, Cleckheaton, West Yorkshire BD19 4TT. Sales: 01274 866100.
Fax: 01274 865557. Parts: 01274 866140. Technical Helpline: 01274 866110. Customer Services: 0870 333 0220.
Email: bradford.spares@vokera.co.uk

Scottish Region: Shuna Street, Maryhill, Glasgow G20 9NW. Sales: 0141 945 6800. Fax: 0141 945 5136.
Parts: 0141 945 6820. Technical Helpline: 0141 945 6810. Customer Services: 0870 333 0220.
Email: glasgow.spares@vokera.co.uk

Vokèra Ireland: West Court, Callan, Co. Kilkenny, Ireland. Sales/Parts: 056 55055.
Fax: 056 55060. Technical Helpline / Customer Services: 056 55057.
Email: eire.spares@vokera.co.uk