USER'S MANUAL

IMMERGAS

Instruction and recommendation booklet

IE

VICTRIX ZEUS SUPERIOR 26 2 - 32 2 ERP

1.037935ENG

Dear Customer,

Our compliments for having chosen a top-quality Immergas product, able to assure well-being and safety for a long period of time. As an Immergas customer you can also count on a qualified after-sales service, prepared and updated to guarantee constant efficiency of your boiler. Read the following pages carefully: you will be able to draw useful suggestions regarding the correct use of the appliance, the respect of which, will confirm your satisfaction for the Immergas product.

For assistance and scheduled maintenance contact Authorised After-Sales centres: they have original spare parts and are specifically trained directly by the manufacturer.

General recommendations

All Immergas products are protected with suitable transport packaging.

The material must be stored in dry environments protected against bad weather.

The instruction book is an integral and essential part of the product and must be consigned to the new user also in the case of transfer or succession of ownership.

It must be stored with care and consulted carefully, as all of the warnings provide important safety indications for installation, use and maintenance stages.

This instructions manual provides technical information for installing Immergas boilers. As for the other issues related to boiler installation (e.g. safety in the work site, environment protection, injury prevention), it is necessary to comply with the provisions specified in the regulations in force and principles of good practice.

In compliance with legislation in force, the systems must be designed by qualified professionals, within the dimensional limits established by the Law. Installation and maintenance must be performed in compliance with the regulations in force, according to the manufacturer's instructions and by professionally qualified staff, intending staff with specific technical skills in the plant sector, as envisioned by the Law.

Improper installation or assembly of the Immergas appliance and/or components, accessories, kit and devices can cause unexpected problems to people, animals and objects. Read the instructions provided with the product carefully to ensure a proper installation.

Maintenance must be carried out by skilled technical staff. The Authorised After-sales Service represents a guarantee of qualifications and professionalism.

The appliance must only be destined for the use for which it has been expressly declared. Any other use will be considered improper and therefore potentially dangerous.

If errors occur during installation, operation and maintenance, due to non compliance with technical laws in force, standards or instructions contained in this book (or however supplied by the manufacturer), the manufacturer is excluded from any contractual and extra-contractual liability for any damages and the appliance warranty is invalidated.

CE DECLARATION OF CONFORMITY
(according to ISO/IEC 17050-1)

The company **IMMERGAS S.p.A.**, with registered office in via Cisa Ligure 95 42041 Brescello (RE) whose design, manufacturing, and after sale assistance processes comply with the requirements of standard **UNI EN ISO 9001:2008**,

DECLARES that:

The boiler model VICTRIX ZEUS SUPERIOR 26 2 and 32 2 ErP complies with European Directives and Delegated European Regulations listed below: "Eco-design" Directive 2009/125/EC, "Energy labelling" Directive 2010/30/EC, EU Regulation 811/2013, EU Regulation 813/2013, "Gas Appliance" Directive 2009/142/EC, "Electromagnetic Compatibility" Directive 2004/108/EC, "Performance" Directive 92/42/EC and "Low Voltage" Directive 2006/95/EC.

Mauro Guareschi

Research & Development Director

Signature:

INDEX

1 BOILER INSTALLATION

1.1 INSTALLATION RECOMMENDATIONS.

The Victrix Zeus Superior ErP boiler has been designed for wall mounted installation only; for heating and production of domestic hot water for domestic use and similar purposes.
The place of installation of the appliance and relative Immergas accessories must have suitable features (technical and structural) such to allow (always in safety, efficiency and comfortable conditions):

- installation (according to the provisions of the technical legislation and technical regulations);
- maintenance operations (including scheduled, periodic, routine and special maintenance);
- removal (to outdoors in the place for loading and transporting the appliances and components) as well as their eventual replacement with appliances and/or equivalent components.

The wall surface must be smooth, without any protrusions or recesses enabling access to the rear part. They are not designed to be installed on plinths or floors (Fig. 1-1).
By varying the type of installation the classification of the boiler also varies, precisely:

- **Type B_{23} or B_{53}** boiler if installed using the relevant terminal for air intake directly from the room in which the boiler has been installed.
- **Type C boiler** if installed using concentric pipes or other types of pipes envisioned for sealed chamber boilers for air intake and expulsion of flue gas.

Only professionally enabled companies are authorised to install Immergas gas appliances.
Installation must be carried out according to regulation standards, current legislation and in compliance with local technical regulations and the required technical procedures.
Before installing the appliance, ensure that it is delivered in perfect condition; if in doubt, contact the supplier immediately. Packing materials (staples, nails, plastic bags, polystyrene foam, etc.) constitute a hazard and must be kept out of the reach of children. If the appliance is installed inside or between cabinets, ensure sufficient space for normal servicing; therefore it is advisable to leave clearance of at least 3 cm between the boiler casing and the vertical sides of the cabinet. Leave adequate space above the boiler for possible water and fume removal connections. At least 60 cm must be left below the boiler in order to assure replacement of the magnesium anode. Keep all flammable objects away from the appliance (paper, rags, plastic, polystyrene, etc.).
Do not place household appliances underneath the boiler as they could be damaged if the safety valve intervenes with an obstructed conveying system (the safety valve must be conveyed away by a draining funnel), or if there are leaks from the hydraulic connections; on the contrary, the manufacturer cannot be held responsible for any damage caused to the household appliances.
For the aforementioned reasons, we recommend not placing furnishings, furniture, etc. under the boiler.
In the event of malfunctions, faults or incorrect operation, turn the appliance off and contact an authorised company (e.g. the Authorised Technical Assistance centre, which has specifically trained staff and original spare parts). Do not attempt to modify or repair the appliance alone. Failure to comply with the above implies personal responsibility and invalidates the warranty.

- Installation regulations:
  - this boiler can be installed outdoors in a partially protected area. A partially protected area is one in which the appliance is not exposed to the direct action of the weather (rain, snow, hail, etc..).
  - Installation in places with a fire risk is prohibited (for example: garages, closed parking stalls), gas appliances and relative flue ducts, flue exhaust pipes and combustion air intake pipes.
  - Installation is prohibited on the vertical projection of cooking hobs.
  - Installation is also forbidden in places/rooms that constitute common parts of apartment buildings such as stairs, cellars, entrance halls, attics, lofts, escape routes, etc. unless otherwise provided by local regulations.

Attention: wall mounting of the boiler must guarantee stable and efficient support for the generator
The plugs (standard supply) are to be used only in conjunction with the mounting brackets or fixing template to fix the appliance to the wall; they only ensure adequate support if inserted correctly (according to technical standards) in walls made of solid or semi-hollow brick or block. In the case of walls made from hollow brick or block, partitions with limited static properties, or in any case walls other than those indicated, a static test must be carried out to ensure adequate support.

N.B.: the hex head screws supplied in the blister pack are to be used exclusively to fix the relative mounting bracket to the wall.

These boilers are used to heat water to below boiling temperature in atmospheric pressure.
They must be connected to a central heating system and hot water circuit suited to their performance and capacity.

"Anti-legionella" heat treatment of the Immergas storage tank (activated by the specific function present on the predisposed thermoregulatory systems): during this stage, the temperature of the water inside the storage tank exceeds 60°C

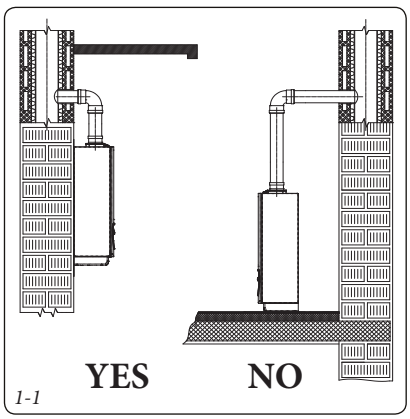

1-1

with a relative risk of burns. Keep this domestic water treatment under control (and inform the users) to prevent unforeseeable damage to people, animals, things. If required install a thermostatic valve on the domestic hot water outlet to prevent scalding.

1.2 MAIN DIMENSIONS.

1-2

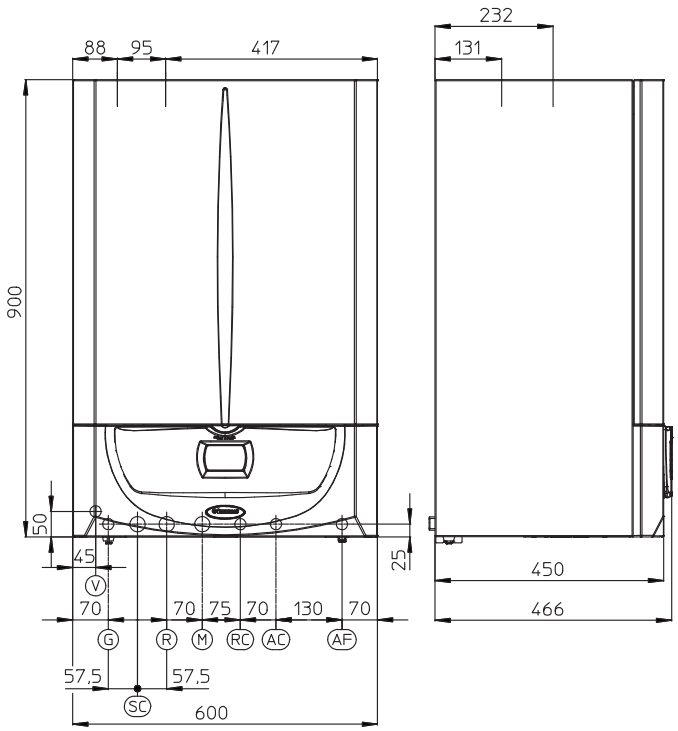

Key:
- *V - Electrical connection*
- *G - Gas supply*
- *SC - Condensate drain (minimum internal diameter 13 mm Ø)*
- *R - System return*
- *M - System flow*
- *RC - Domestic hot water recirculation (optional)*
- *AC - Domestic hot water outlet*
- *AF - Domestic cold water inlet*

Height (mm)	Width (mm)		Depth (mm)	
900	600		466	
CONNECTIONS				
GAS	DOMESTIC HOT WATER		SYSTEM	
G	AC	AF	R	M
1/2”	1/2”	1/2”	3/4”	3/4”

1.3 ANTIFREEZE PROTECTION.

Minimum temperature -5°C. The boiler comes standard with an anti-freeze function that activates the pump and burner when the system water temperature in the boiler falls below 4°C. *In these conditions the boiler is protected against freezing to an ambient temperature of -5°C.*

Minimum temperature -15°C. In the event the boiler is installed in a place where the temperature falls below -5°C, the appliance can freeze. *To prevent the risk of freezing follow the instructions below:*

- protect the central heating circuit from freezing by inserting a good-quality antifreeze liquid into this circuit, which is specially suited for central heating systems and which is manufacturer guaranteed not to cause damage to the heat exchanger or other components of the boiler. The antifreeze liquid must not be harmful to one's health. The instructions of the manufacturer of this liquid must be followed scrupulously regarding the percentage necessary with respect to the minimum temperature at which the system must be kept. An aqueous solution must be made with potential pollution class of water 2 (EN 1717:2002).

  The materials used for the central heating circuit of Immergas boilers withstand ethylene and propylene glycol based antifreeze liquids (if the mixtures are prepared perfectly).

  For life and possible disposal, follow the supplier's instructions.

- Protect the domestic hot water circuit against freezing by using an accessory that is supplied on request (anti-freeze kit) comprising two electric heating elements, the relevant cables and a control thermostat (carefully read the installation instructions contained in the accessory kit pack).

In these conditions the boiler is protected against freezing to temperature of -15°C.

Boiler antifreeze protection (both -5°C and -15°C) is thus ensured only if:
- *the boiler is correctly connected to gas and electricity power supply circuits;*
- *the boiler is powered constantly;*
- *the boiler is not in stand-by (⏻).*
- *the boiler is not in anomaly conditions (parag. 2.6);*
- *the essential components of the boiler and/or antifreeze kit are not faulty.*

The warranty does not cover damage due to interruption of the electrical power supply and failure to comply with that stated on the previous page.

NOTE: if the boiler is installed in places where the temperature falls below 0°C the domestic hot water and central heating attachment pipes must be insulated.

1.4 GAS CONNECTION.

Our boilers are designed to operate with methane gas (G20) and LPG. Supply pipes must be the same as or larger than the 1/2"G boiler fitting. Before connecting the gas line, carefully clean inside all the fuel feed system pipes to remove any residue that could impair boiler efficiency. Also make sure the gas corresponds to that for which the boiler is prepared (see boiler data name plate). If different, the appliance must be converted for operation with the other type of gas (see converting appliance for other gas types). The dynamic gas supply (methane or LPG) pressure must also be checked according to the type used in the boiler, which must comply with the technical standards in force, as insufficient levels can reduce generator output and cause malfunctions. Ensure correct gas cock connection. The gas supply pipe must be suitably dimensioned according to current regulations in order to guarantee correct gas flow rate to the burner even in conditions of maximum generator output and to guarantee appliance efficiency (technical specifications). The coupling system must conform to technical standards in force.

Fuel gas quality. The appliance was designed to operate with combustible gas free of impurities; otherwise it is advisable to fit special filters upstream of the appliance to restore the purity of the fuel.

Storage tanks (in case of supply from LPG depot).

- New LPG storage tanks may contain residual inert gases (nitrogen) that degrade the mixture delivered to the appliance casing functioning anomalies.
- Due to the composition of the LPG mixture, layering of the mixture components may occur during the period of storage in the tanks. This can cause a variation in the heating power of the mixture delivered to the appliance, with subsequent change in its performance.

1.5 HYDRAULIC CONNECTION.

Attention: in order not to void the condensation module warranty, before making the boiler connections, carefully wash the heating system (pipes, radiators, etc.) with special pickling or descaling products to remove any deposits that could compromise correct boiler operation.

A chemical treatment of the thermal system water is required, in compliance with the technical standards in force, in order to protect the system and the appliance from deposits (e.g., lime scale), slurry or other hazardous deposits.

Water connections must be made in a rational way using the couplings on the boiler template. The boiler safety valves outlet must be connected to a draining funnel. Otherwise, the manufacturer declines any responsibility in case of flooding if the drain valve cuts in.

Attention: Immergas declines all liability in the event of damage caused by the inclusion of automatic filling that is not its own brand.

In order to meet the system requirements established by the technical regulation in force in relation to the pollution of drinking water, we recommend installing the IMMERGAS anti-backflow kit to be used upstream of the cold water inlet connection of the boiler. It is also recommended that the heat transfer fluid (e.g. water + glycol) entered in the primary circuit of the boiler (heating circuit), complies with the local regulations in force.

Attention: *to preserve the duration and the efficiency features of the appliance, in the presence of water whose features can lead to the deposit of scale, installation of the "polyphosphate dispenser" kit is recommended.*

Condensate drain. To drain the condensate produced by the appliance, it is necessary to connect to the drainage system by means of acid condensate resistant pipes, with an internal Ø of at least 13 mm. The system connecting the appliance to the drainage system must be carried out in such a way as to prevent freezing of the liquid contained in it. Before appliance ignition, ensure that the condensate can be correctly removed. After first ignition, check that the drain trap is filled with condensate (para. 1.21). Also, comply with national and local regulations on discharging waste waters.

1.6 ELECTRICAL CONNECTION.

The "Victrix Zeus Superior ErP" boiler has an IPX5D protection rating for the entire appliance. Electrical safety of the appliance is reached only when it is correctly connected to an efficient earthing system as specified by current safety standards.

Attention: Immergas S.p.A. declines any responsibility for damage or physical injury caused by failure to connect the boiler to an efficient earth system or failure to comply with the reference standards.

Also ensure that the electrical installation corresponds to maximum absorbed power specifications as shown on the boiler data-plate. Boilers are supplied complete with an "X" type power cable without plug. The power supply cable must be connected to a 230V ±10% / 50Hz mains supply respecting L-N polarity and earth connection; ⏚, this network must also have a multi-pole circuit breaker with class III over-voltage category. When replacing the power supply cable, contact a qualified firm (e.g. the Authorised After-Sales Technical Assistance Service). The power cable must be laid as shown (Fig. 1-3).
In the event of mains fuse replacement on the P.C.B., use a 3.15A quick-blow fuse. For the main power supply to the appliance, never use adapters, multiple sockets or extension leads.

Installation with system operating at direct low temperature. The boiler can directly feed a low temperature system by acting on parameter "P66" (Par. 3.8) and setting the delivery temperature adjustment range "P66/A" and "P66/B". In this situation it is good practice to insert a safety device in series with the power supply and boiler. This device is made up from a thermostat with a temperature limit of 60°C. The thermostat must be positioned on the system delivery pipe at a distance of at least 2 metres from the boiler.

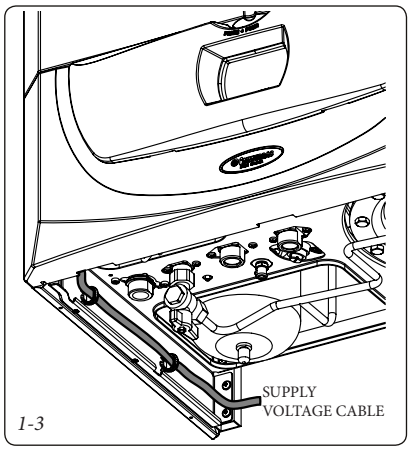

1-3

1.7 REMOTE CONTROLS AND ROOM CHRONO-THERMOSTATS (OPTIONAL).

The boiler is prepared for the application of room chrono-thermostats or remote controls, which are available as optional kits.

All Immergas chrono-thermostats are connected with 2 wires only. Carefully read the user and assembly instructions contained in the accessory kit.

- On/Off digital Immergas chrono-thermostat (Fig. 1-4). The chrono-thermostat allows:
  - set two room temperature value: one for daytime (comfort temperature) and one for night-time (reduced temperature);
  - set a weekly program with four daily switch on and switch off times;
  - select the required operating mode from the various possible alternatives:
    - manual mode (with adjustable temperature).
    - automatic mode (with set program).
    - forced automatic mode (momentarily changing the temperature of the automatic program).

  The chrono-thermostat is powered by two 1.5V LR 6 type alkaline batteries.
- There are two types of remote controls available: Comando Amico Remoto remote control^{V2} (CAR^{V2}) (Fig. 1-5) and Super Comando Amico Remoto remote control (Super CAR) (Fig. 1-5) both with a climate chrono-thermostat operation. In addition to the functions described in the previous point, the chrono-thermostat panels enable the user to control all the important information regarding operation of the appliance and the central heating system with the opportunity of easily intervening on the previously set parameters without having to go to the place where the appliance is installed. The panel is provided with self-diagnosis to display any boiler functioning anomalies. The climate chrono-thermostat incorporated into the remote panel enables the system flow temperature to be adjusted to the actual needs of the room being heated, in order to obtain the desired room temperature with extreme precision and therefore with evident saving in running costs. The CAR^{V2} is fed directly by the boiler by means of the same 2 wires used for the transmission of data between the boiler and device.

Important: if the system is subdivided into areas using the relevant kit, the CAR ^{V2} and the Super CAR must be used with its climate thermostat function disabled, i.e. it must be set to On/Off mode.

CAR ^{V2}, Super CAR or On/Off chrono-thermostat electrical connection (Optional). *The operations described below must be performed after having removed the voltage from the appliance.* Any On/Off room chrono-thermostat must be connected to clamps 40 and 41 eliminating jumper X40 (Fig. 3-2). Make sure that the On/Off thermostat contact is of the "clean" type, i.e. independent of the mains voltage, otherwise the P.C.B. would be damaged. Any CAR ^{V2} or Super CAR must be connected by means of terminals IN+ and IN- to terminals 42 and 43 on the P.C.B. (in the boiler), eliminating jumper X40 and respecting polarity (Fig. 3-2). Connection with the wrong polarity prevents functioning, but without damaging the CAR^{V2} The boiler can only be connected to one remote control.

Important: if the Comando Amico Remoto remote control^{V2} is used, arrange two separate lines in compliance with current regulations regarding electrical systems. No boiler pipes must ever be used to earth the electric system or telephone lines. Ensure elimination of this risk before making the boiler electrical connections.

1.8 EXTERNAL TEMPERATURE PROBE (OPTIONAL).

The boiler is designed for the application of the external temperature probe (Fig. 1-6), which is available as an optional kit. Refer to the relative instruction sheet for positioning of the external probe. The probe can be connected directly to the boiler electrical system and allows the max. system flow temperature to be automatically decreased when the external temperature increases, in order to adjust the heat supplied to the system according to the change in external temperature. The external probe always operates when connected, regardless of the presence or type of room chrono-thermostat used and can work in combination with Immergas timer thermostats. The correlation between system flow temperature and external temperature is determined by the parameters set in menu "M5" under item "P66" according to the curves represented in the diagram (Fig. 1-7). The electric connection of the external probe must be made on clamps 38 and 39 on the boiler P.C.B. (Fig. 3-2).

Comando Amico Remoto remote control^{V2} (CAR^{V2}) On/Off digital chrono-thermostat.

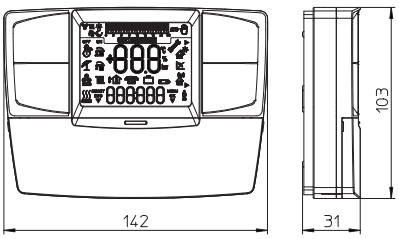

1-4

Super Comando Amico Remoto remote control

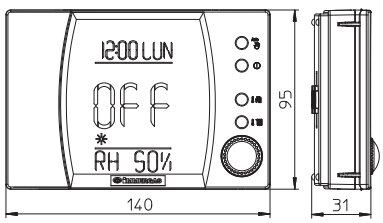

1-5

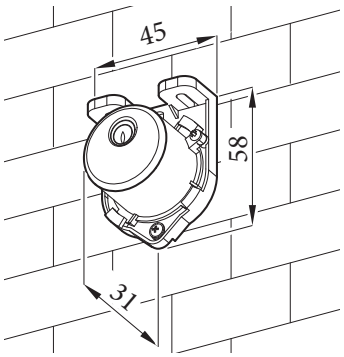

1-6

EXTERNAL PROBE

Correction law of the flow temperature depending on the external temperature and user adjustment of the central heating temperature.

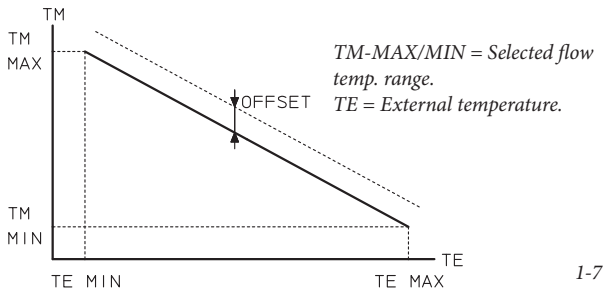

1-7

1.9 IMMERGAS FLUE SYSTEMS.

Immergas supplies various solutions separately from the boilers regarding the installation of air intake terminals and flue exhaust, which are fundamental for boiler operation.

Attention: the boiler must be installed exclusively with an original Immergas "Green Range" inspectionable air intake device and fumes extraction system made of plastic, as required by the regulations in force.

The plastic pipes cannot be installed outdoors, for tracts longer than 40 cm, without suitable protection from UV rays and other atmospheric agents.

This system can be identified by an identification mark and special distinctive marking bearing the note: "only for condensing boilers".

- Resistance factors and equivalent lengths. Each flue component has a *Resistance Factor* based on experimental tests and specified in the table below. The Resistance Factor for individual components is independent from the type of boiler on which it is installed and has a dimensionless size. It is however, conditioned by the temperature of the fluids that pass through the pipe and therefore, varies according to applications for air intake or flue exhaust. Each single component has a resistance corresponding to a certain length in metres of pipe of the same diameter; the so-called *equivalent length*, can be obtained from the ratio between the relative Resistance Factors. *All boilers have an experimentally obtainable maximum Resistance Factor equal to 100.* The maximum Resistance Factor allowed corresponds to the resistance encountered with the maximum allowed pipe length for each type of Terminal Kit. This information allows calculations to be made to verify the possibility of setting up various flue configurations.
- **Positioning the gaskets (black) for "green range" flue systems.** Position the gasket correctly (for bends and extensions) (Fig. 1-8):
  - gasket (A) with notches, to use for bends;
  - gasket (B) without notches, to use for extensions;

  N.B.: if component lubrication (already carried out by the manufacturer) is not sufficient, remove the residual lubricant using a dry cloth, then to ease fitting coat the parts with talc, supplied in the kit.
- Coupling extension pipes and concentric elbows. To install push-fitting extensions with other elements of the flue, proceed as follows: Install the concentric pipe or elbow with the male side (smooth) on the female side (with lip seal) to the end stop on the previously installed element in order to ensure sealing efficiency of the coupling.

  Attention: if the exhaust terminal and/or concentric extension pipe needs shortening, consider that the internal duct must always protrude by 5 mm with respect to the external duct.
- **N.B.:** for safety purposes, do not obstruct the boiler intake/exhaust terminal, even temporarily.
- **N.B.:** when installing horizontal pipes, a minimum inclination of 3% must be maintained and a section clip with pin must be installed every 3 metres.

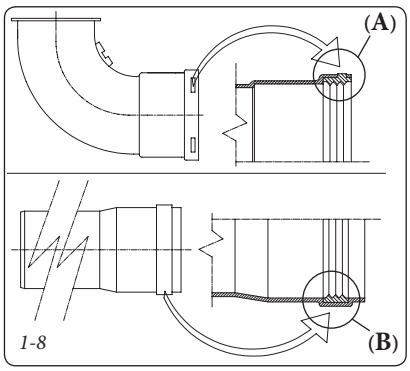

1-8

1.10 TABLES OF RESISTANCE FACTORS AND EQUIVALENT LENGTHS.

TYPE OF DUCT		Resistance Factor (R)	Equivalent length in m of concentric pipe Ø 80/125
Concentric pipe Ø 80/125 m 1	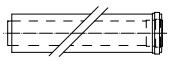	2.1	1
Concentric bend 90° Ø 80/125		3.0	1.4
Concentric bend 45° Ø 80/125		2.1	1
Terminal complete with concentric horizontal intake-exhaust Ø 80/125	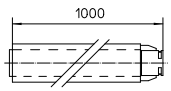	2.8	1.3
Terminal complete with concentric vertical intake-exhaust Ø 80/125	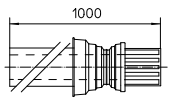	3.6	1.7
Concentric bend 90° Ø 80/125 with inspection		3.4	1.6
Stub pipe with inspection Ø 80/125		3.4	1.6

INSTALLER

USER

MAINTENANCE TECHNICIAN

TYPE OF DUCT		Resistance Factor (R)	Equivalent length in m of concentric pipe Ø 60/100	Equivalent length in metres of pipe Ø 80	Equivalent length in metres of pipe Ø 60	Equivalent length in m of concentric pipe Ø 80/125
Concentric pipe Ø 60/100 m 1		Intake and Exhaust 6.4	**m 1**	Intake m 7.3 Exhaust m 5.3	Exhaust m 1.9	m 3.0
90° bend concentric Ø 60/100		Intake and Exhaust 8.2	**m 1.3**	Intake m 9.4 Exhaust m 6.8	Exhaust m 2.5	m 3.9
45° bend concentric Ø 60/100		Intake and Exhaust 6.4	**m 1**	Intake m 7.3 Exhaust m 5.3	Exhaust m 1.9	m 3.0
Terminal complete with horizontal concentric intake-exhaust Ø 60/100	960	Intake and Exhaust 15	**m 2.3**	Intake m 17.2 Exhaust m 12.5	Exhaust m 4.5	m 7.1
Concentric horizontal intake- exhaust terminal Ø 60/100		Intake and Exhaust 10	**m 1.5**	Intake m 11.5 Exhaust m 8.3	Exhaust m 3.0	m 4.7
Terminal complete with concentric vertical intake-exhaust Ø 60/100	1250	Intake and Exhaust 16.3	**m 2.5**	Intake m 18.7 Exhaust m 13.6	Exhaust m 4.9	m 7.7
Concentric intake-exhaust terminal Ø 60/100 vertical		Intake and Exhaust 9	**m 1.4**	Intake m 10.3 Exhaust m 7.5	Exhaust m 2.7	m 4.3
Pipe Ø 80 m 1		Intake 0.87 Exhaust 1.2	m 0.1 m 0.2	**Intake m 1.0** **Exhaust m 1.0**	Exhaust m 0.4	m 0.4 m 0.5
Complete terminal intake Ø 80 m 1		Intake 3	m 0.5	**Intake m 3.4**	Exhaust m 0.9	m 1.4
Intake terminal Ø 80 Exhaust terminal Ø 80		Intake 2.2 Exhaust 1.9	m 0.35 m 0.3	**Intake m 2.5** **Exhaust m 1.6**	Exhaust m 0.6	m 1 m 0.9
Bend 90° Ø 80		Intake 1.9 Exhaust 2.6	m 0.3 m 0.4	**Intake m 2.2** **Exhaust m 2.1**	Exhaust m 0.8	m 0.9 m 1.2
Bend 45° Ø 80		Intake 1.2 Exhaust 1.6	m 0.2 m 0.25	**Intake m 1.4** **Exhaust m 1.3**	Exhaust m 0.5	m 0.5 0.7
Pipe Ø 60 m 1 for ducting		Exhaust 3.3	m 0.5	Intake 3.8 Exhaust 2.7	**Exhaust m 1.0**	m 1.5
90° 60 Ø Bend for ducting		Exhaust 3.5	m 0.55	Intake 4.0 Exhaust 2.9	**Exhaust m 1.1**	m 1.6
Reduction Ø 80/60		Intake and Exhaust 2.6	m 0.4	Intake m 3.0 Exhaust m 2.1	**Exhaust m 0.8**	m 1.2
Terminal complete with vertical exhaust 60 Ø for ducting	560	Exhaust 12.2	m 1.9	Intake m 14 Exhaust m 10.1	**Exhaust m 3.7**	m 5.8

1.11 OUTDOOR INSTALLATION IN A PARTIALLY PROTECTED AREA.

N.B.: *a partially protected location is one in which the appliance is not exposed to the direct action of the weather (rain, snow, hail, etc..).*

This type of installation is only possible when permitted by the laws in force in the appliance's country of destination.

- **Configuration type B, open chamber and forced draught.**

Using the special coverage kit one can achieve direct air intake (Fig. 1-9) and fumes exhaust in a single flue or directly outside. In this configuration it is possible to install the boiler in a partially protected place. In this configuration the boiler is classified as type B.
With this configuration:
- air intake takes place directly from the environment in which the appliance is installed (outside);
- the flue gas exhaust must be connected to its own single flue (B_{23}) or ducted directly outside via a vertical terminal for direct exhaust (B_{53}) or via an Immergas ducting system (B_{53}).

The technical regulations in force must be respected.

- **Coverage kit assembly (Fig. 1-11).** Remove the cap and gasket from the intake hole. Install the Ø 80 outlet flange on the central hole of the boiler, taking care to insert the gasket supplied with the kit and tighten by means of the screws provided. Install the upper cover, fixing it using the 4 screws present in the kit, positioning the relevant gaskets. Engage the 90° Ø 80 bend with the male end (smooth) in the female end (with lip seal) of the Ø 80 flange unit until it stops. Introduce the gasket, making it run along the bend. Fix it using the sheet steel plate and tighten by means of the straps present in the kit, making sure to block the 4 gasket flaps. Fit the male end (smooth) of the exhaust terminal into the the female end of the bend 90° Ø 80, making sure that the relevant wall sealing plate is already fitted; this will ensure hold and joining of the elements making up the kit.

Max. length of exhaust duct. The flue pipe (both vertical or horizontal) can be *extended to a max. length of 30 linear metres.*

- Coupling of extension pipes. To install any push-fit extensions with other flue elements, it is necessary to act as follows: install the pipe or elbow with the male side (smooth) into the female section (with lip seal) to the end stop on the previously installed element. This will ensure correct sealing and joining of the elements.
- **Configuration without cover kit in a partially protected location (type C boiler)**

  By leaving the side plugs fitted it is possible to install the appliance externally without the cover kit. Installation takes place using the Ø60/100, Ø 80/125 and separator Ø 80/80 concentric intake/ exhaust kits. Refer to the paragraph relative to indoor installation. In this configuration the upper cover kit guarantees additional protection for the boiler. It is recommended but not compulsory.

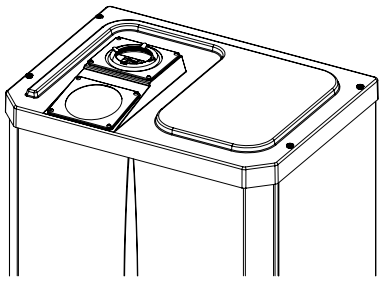

1-9

1-11

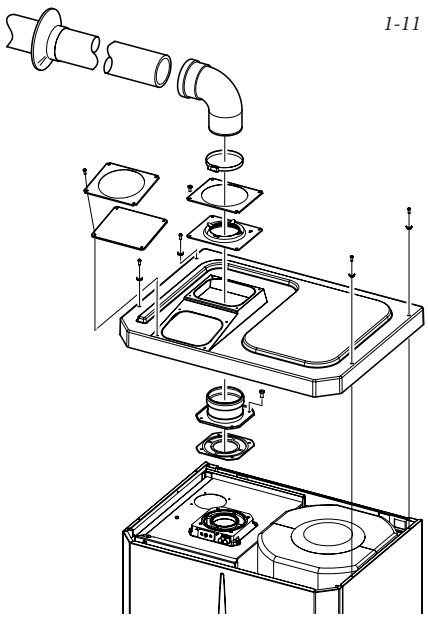

The cover kit includes:
N° 1 Thermoformed cover
N°1 Gasket clamping plate
N°1 Gasket
N°1 Gasket tightening strap
N°1 Intake hole covering plate

The terminal kit includes:
N° 1 Gasket
N° 1 Exhaust flange Ø 80
N° 1 Elbow 90° Ø 80
N° 1 Drain pipe Ø 80
N° 1 Wall sealing plate

1-12

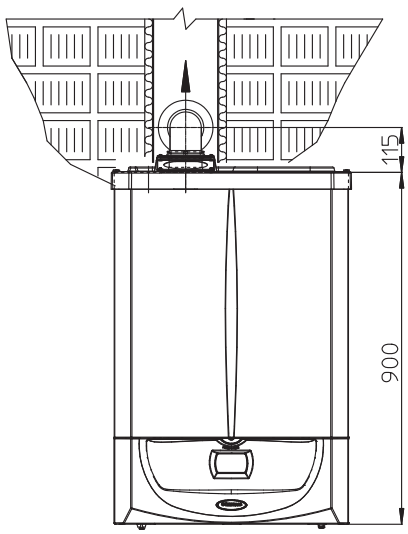

1.12 CONCENTRIC HORIZONTAL KIT INSTALLATION.

Type C configuration, sealed chamber and fan assisted.

The position of the terminal (in terms of distances from openings, overlooking buildings, floor, etc.) must be in compliance with the regulations in force.

This terminal is connected directly to the outside of the building for air intake and flue exhaust. The horizontal kit can be installed with the rear, right side, left side or front outlet. For installation with frontal outlet, one must use the fixing plate and a concentric bend coupling in order to ensure sufficient space to carry out the tests required by law upon commissioning.

- External grid. Both the Ø 60/100 and Ø 80/125 intake/exhaust terminal, if properly installed, is pleasant to look at on the outside of the building. Make sure that the external silicone wall sealing plate is properly inserted in the wall.

  N.B.: for proper system operation the terminal with grid must be installed correctly ensuring that, the "high" indication on the terminal is observed during installation.

Horizontal intake-exhaust kit Ø 60/100 Kit assembly (Fig. 1-13): install the bend with flange (2) on the central hole of the boiler, positioning gasket (1) with the circular projections downwards in contact with the boiler flange, and tighten using the screws supplied with the kit. Fit the Ø 60/100 (3) concentric terminal pipe with the male side (smooth) to the female side of the bend (2) up to the end stop; making sure that the internal and external wall sealing plate have been fitted, this will ensure sealing and joining of the elements making up the kit.

- Extensions for Ø 60/100 horizontal kit (Fig. 1-14). The kit with this configuration can be extended up to a *max. 12.9 horizontal m* including the terminal with grid and excluding the concentric bend leaving the boiler. This configuration corresponds to a resistance factor of 100. In this case the special extensions must be requested.

Immergas also provides a Ø 60/100 simplified terminal, which in combination with its extension kits allows you to reach a maximum extension of 11.9 metres.

Horizontal intake-exhaust kit Ø 80/125 Kit assembly (Fig. 1-15): to install the kit Ø 80/125 one must use the flanged adapter kit in order to install the flue system Ø 80/125. Install the flanged adaptor (2) on the central hole of the boiler, positioning gasket (1) with the circular projections downwards in contact with the boiler flange and tighten using the screws supplied with the kit. Engage the bend (3) with the male side (smooth) to the end stop on the adapter (1). Fit the Ø 80/125 (5) concentric terminal pipe with the male side (smooth) to the female side of the bend (4) (with lip seals) up to the end top; making sure that the internal (6) and external wall sealing plate (7) have been fitted, this will ensure sealing and joining of the elements making up the kit.

- Extensions for horizontal kit Ø 80/125 (Fig. 1-16). The kit with this configuration can be extended up to a *max. length of 32 m*, including the terminal with grid and excluding the concentric bend leaving the boiler. If additional components are assembled, the length equivalent to the maximum allowed must be subtracted. In this case the special extensions must be requested.

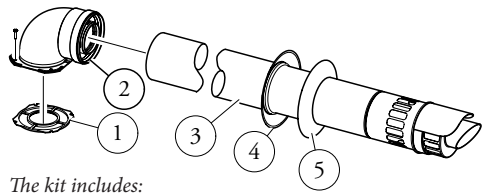

The kit includes:
N° 1 - Gasket (1)
N° 1 - Concentric bend Ø 60/100 (2)
N° 1 - Int./exhaust concentric terminal Ø 60/100 (3)
N° 1 - Internal wall sealing plate (4)
N° 1 - External wall sealing plate (5)

1-13

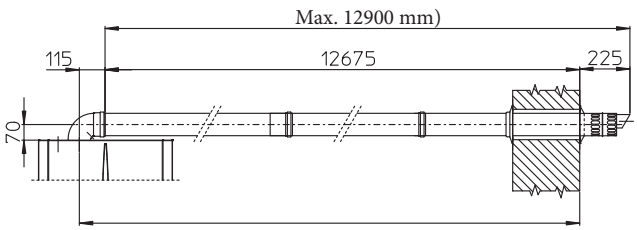

1-14

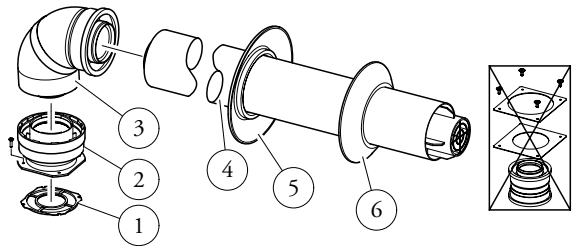

The adaptor kit includes:
N° 1 - Gasket (1)
N° 1 - Adaptor Ø 80/125 (2)

The Kit Ø 80/125 includes:
N° 1 - Concentric bend Ø 80/125 a 87° (3)
N° 1 - Int./exhaust concentric terminal Ø 80/125 (4)
N° 1 - Internal wall sealing plate (5)
N° 1 - External wall sealing plate (6)
The remaining kit components must not be used

1-15

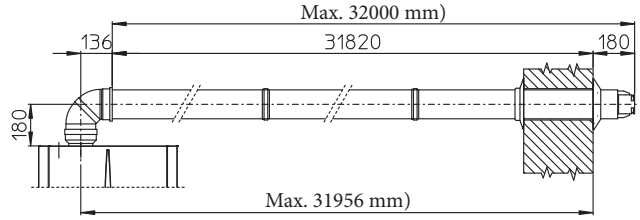

1-16

1.13 CONCENTRIC VERTICAL KIT INSTALLATION.

Type C configuration, sealed chamber and fan assisted.

Concentric vertical intake and exhaust kit. This vertical terminal is connected directly to the outside of the building for air intake and flue exhaust.

N.B.: the vertical kit with aluminium tile enables installation on terraces and roofs with a maximum slope of 45% (approx 25°) and the height between the terminal cap and half-shell (374 mm for Ø 60/100 and 260 mm for Ø 80/125) must always be observed.

Vertical kit with aluminium tile Ø 60/100. Kit assembly (Fig. 1-17): install the concentric flange (2) on the central hole of the boiler, positioning gasket (1) with the circular projections downwards in contact with the boiler flange, and tighten using the screws supplied with the kit. Installation of the fake aluminium tile: replace the tiles with the aluminium sheet (4), shaping it to ensure that rainwater runs off. Position the fixed half-shell (6) on the aluminium tile and insert the intake-exhaust pipe (5). Fit the Ø 60/100 (3) concentric terminal pipe with the male side (5) (smooth) into the flange (2) up to the end stop; making sure that the wall sealing plate has been fitted (3), this will ensure sealing and joining of the elements making up the kit.

Note: *when the boiler is installed in areas where very rigid temperatures can be reached, a special anti-freeze kit is available that can be installed as an alternative to the standard kit.*

- Extensions for vertical kit Ø 60/100 (Fig. 1-18). The kit with this configuration can be extended to *a max. straight vertical length of 14.4 m*, including the terminal. This configuration corresponds to a resistance factor of 100. In this case specific extensions must be requested.

Vertical kit with aluminium tile Ø 80/125. Kit assembly (Fig. 1-19): to install the kit Ø 80/125 one must use the flanged adapter kit in order to install the flue system Ø 80/125. Install the flanged adaptor (2) on the central hole of the boiler, positioning gasket (1) with the circular projections downwards in contact with the boiler flange and tighten using the screws supplied with the kit. Installation of the fake aluminium tile: replace the tiles with the aluminium sheet (4), shaping it to ensure that rainwater runs off. Position the fixed half-shell (5) on the aluminium tile and insert the intake-exhaust pipe (7). Fit the 80/125 Ø concentric terminal pipe with the male end (6) (smooth) to the female end of the adapter (1) (with lip gasket) up to the stop; making sure that the wall sealing plate (3) has been fitted, this will ensure sealing and joining of the elements making up the kit.

- Extensions for vertical kit Ø 80/125 (Fig. 1-20). The kit with this configuration can be extended up to a *max. length of 32 m* including the terminal. If additional components are assembled, the length equivalent to the maximum allowed must be subtracted. In this case specific extensions must be requested.

1-17 **C_{33}**

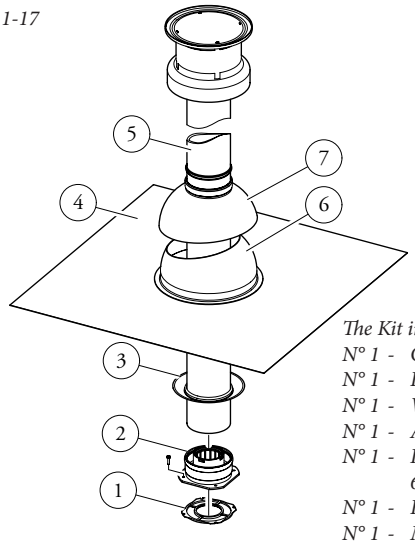

The Kit includes:
N° 1 - Gasket (1)
N° 1 - Female concentric flange (2)
N° 1 - Wall sealing plate (3)
N° 1 - Aluminium tile (4)
N° 1 - Int./exhaust concentric pipe Ø 60/100 (5)
N° 1 - Fixed half-shell (6)
N° 1 - Mobile half-shell (7)

1-18 **C_{33}**

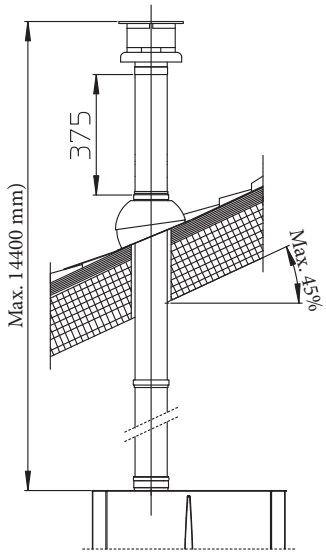

1-19 **C_{33}**

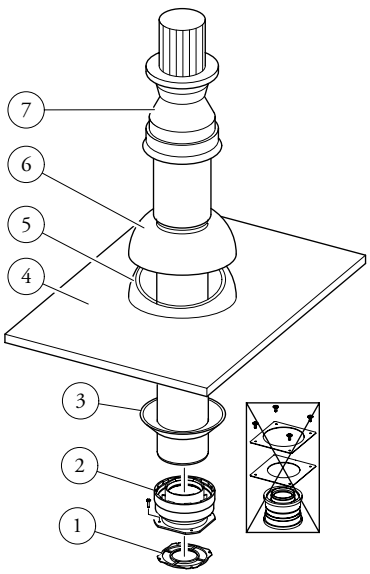

The adaptor kit includes:
N° 1 - Gasket (1)
N° 1 - Adaptor Ø 80/125 (2)

The Kit Ø 80/125 includes:
N° 1 - Wall sealing plate (3)
N° 1 - Aluminium tile (4)
N° 1 - Fixed half-shell (5)
N° 1 - Mobile half-shell (6)
N° 1 - Int./exhaust concentric pipe Ø 80/125 (7)
The remaining kit components must not be used

1-20 **C_{33}**

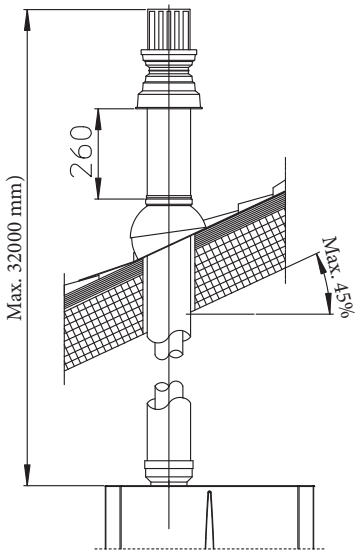

1.14 SEPARATOR KIT INSTALLATION. Type C configuration, sealed chamber and fan assisted.

Separator kit Ø 80/80. This kit allows air to come in from outside the building and the fumes to exit from the chimney or flue through divided flue exhaust and air intake pipes. Combustion products are expelled from pipe (S) (in plastic, so as to resist acid condensate). Air is taken in through duct (A) for combustion (this is also in plastic). The intake pipe (A) can be installed either on the right or left hand side of the central exhaust pipe (S). Both ducts can be routed in any direction.

- Kit assembly (Fig. 1-21): install flange (4) on the innermost hole of the boiler, positioning gasket (1) with the circular projections downwards in contact with the boiler flange, and tighten using the hex screws with flat tip supplied with the kit. Remove the flat flange present in the most external hole and replace it with the flange (3), positioning the gasket (2) already present in the boiler and tighten using the supplied self-threading screws. Fit the male side (smooth) to the bends (5) in the female side of the flanges (3 and 4). Fit the intake terminal (6) with the male side (smooth) in the female side of the bend (5) up to the end stop, ensuring that the internal and external wall sealing plates are fitted. Fit the exhaust pipe (9) with the male side (smooth) to the female side of the bend (5) up to the end stop; making sure that the internal wall sealing plate has been fitted, this will ensure sealing and joining of the elements making up the kit.
- Installation clearances (Fig. 1-22). The minimum installation clearance measurements of the Ø 80/80 separator terminal kit have been stated in some limit conditions.
- Extensions for separator kit Ø 80/80. The maximum vertical straight length (without bends) that can be used for Ø 80 intake and exhaust pipes is 41 metres, regardless from whether they are used for intake or exhaust. The maximum horizontal straight length (with bend in suction and in exhaust) that can be used for Ø 80 intake and exhaust pipes is 36 metres, regardless from whether they are used for intake or exhaust.

N.B.: to favour the removal of possible condensate forming in the exhaust pipe, tilt the pipes towards the boiler with a minimum slope of 1.5% (Fig. 1-23).

1-21 **C_{53}* - C_{83}**

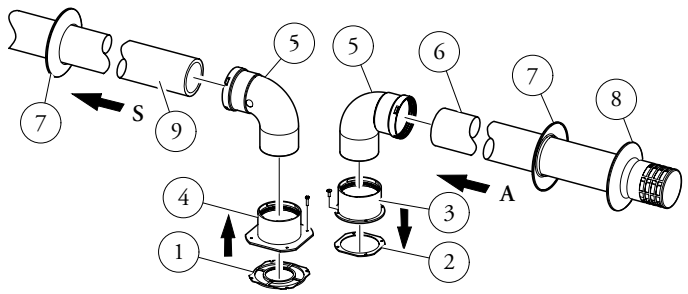

The kit includes:

N° 1 - Exhaust gasket (1)	*N° 2 - Bend 90° Ø 80 (5)*
N° 1 - Flange seal gasket (2)	*N° 1 - Intake terminal Ø 80 (6)*
N° 1 - Female intake flange (3)	*N° 2 - Internal wall sealing plates (7)*
N° 1 - Female drain flange (4)	*N° 1 - External wall sealing plate (8)*
	N° 1 - Drain pipe Ø 80 (9)

* *to er complete C_{53} configuration also provide for a roof discharge terminal.*

1-22 **C_{43}**

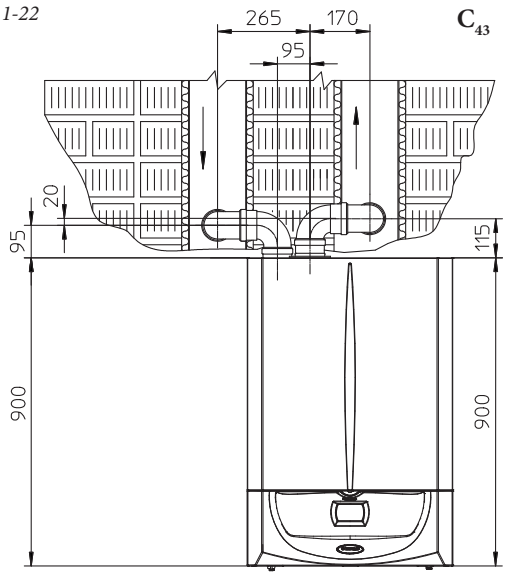

C_{83}

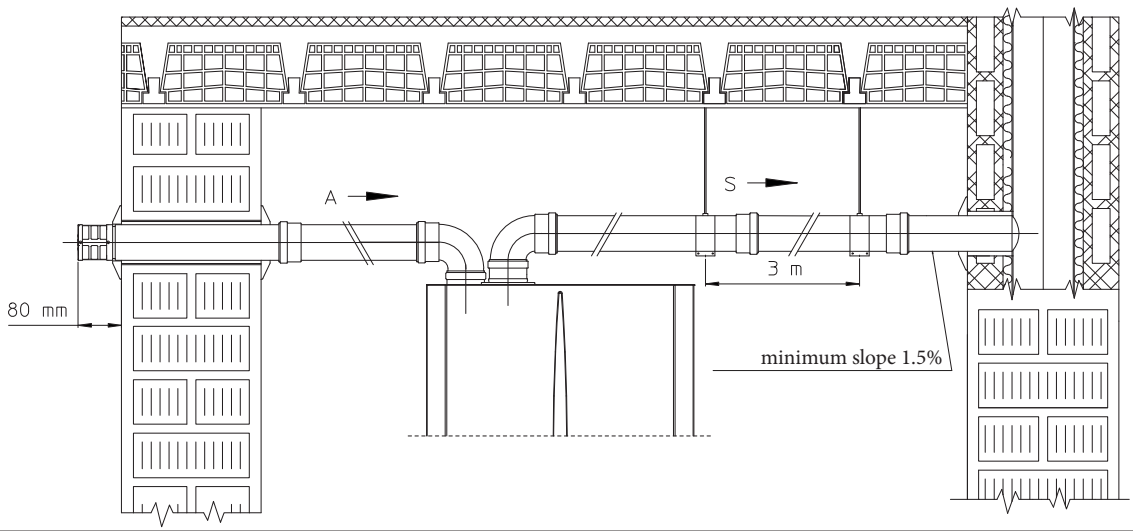

1-23

1.15 ADAPTOR C9 KIT INSTALLATION.

This kit allows an Immergas boiler to be installed in "C_{93}" configuration, with combustion air intake directly from the shaft where the flue gas exhaust is, obtained by means of a ducting system.

System composition.

The system must be combined with the following components (sold separately) to be functional and complete:

- kit C_{93} Ø 100 or Ø125 version
- ducting kit Ø 60 or Ø 80
- fumes exhaust kit Ø 60/100 or Ø 80/125 configured according to the installation and type of boiler.

Kit Assembly.

- Mount the components of kit "C9" on the door (A) of the ducting system (Fig. 1-25).
- (Version Ø 125 only) mount the flanged adaptor (11) interposing the concentric gasket (10) on the boiler, fitting it with the screws (12).
- Mount the ducting system as described in the relative instructions sheet.
- Calculate the distances between the boiler drain and the bend of the ducting system.
- Prepare the boiler flue system, making sure that the internal pipe of the concentric kit is fitted properly in the bend of the ducting system (quota "X" fig. 1-26), while the external pipe must be fitted on the adaptor until it stops (1).

N.B.: to encourage the removal of possible condensate forming in the exhaust pipe, tilt the pipes towards the boiler with a minimum slope of 1.5%.

- Mount the cover (A) complete with adaptor (1) and caps (6) on the wall and assemble the flue system to the ducting system.

N.B.: (version Ø 125 only) before assembly check the gaskets are in the right position. In the event component lubrication (already carried out by the manufacturer) is not sufficient, remove the residual lubricant using a dry cloth, then to ease fitting coat the parts with common or industrial talc.

Once all components have been assembled properly, the exhaust fumes will be expelled via the ducting system; the combustion air for normal boiler operation will be aspirated directly by the shaft (Fig. 1-26).

Technical data.

- The dimensions of the shafts must ensure a minimum gap between the outer wall of the smoke duct and the inner wall of the shaft: 30 mm for circular section shafts and 20 mm in the event of a square section shaft (Fig. 1-24).
- Maximum 2 changes of direction are allowed on the vertical section of the flue system with a maximum clearance angle of 30° with respect to the vertical.
- The maximum vertical extension using a Ø 60 ducting system is 13 m, the maximum extension includes 1 bend Ø 60/10 at 90°, 1 m of horizontal pipe 60/100, 1 90° ducted bend Ø 60 and the roof terminal for ducting.

  To determine the C_{93} flue system in configurations other than that described (Fig. 1-26) one must consider that 1 metre of ducted pipe according to the indications described has a resistance factor equal to 4.9.
- The maximum vertical extension using a Ø 80 ducting system is 28 m, the maximum extension includes 1 adapter 60/100 to 80/125, 1 87° bend Ø 80/125, 1 m of horizontal pipe 80/125, 1 90° ducted bend Ø 80 and the roof terminal for ducting.

  To determine the C_{93} flue system in configurations other than that described (Fig. 1-26) one must consider the following pressure drops:
  - 1 m of concentric pipe Ø 80/125 = 1 m of ducted pipe;
  - 1 87° bend = 1.4 m of ducted pipe;

  Consequently one must subtract the equivalent length of the part added to the 28 m available.

1-24

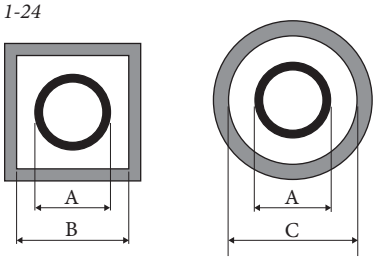

Rigid Ø 60 ducting (A) mm	SHAFT (B) mm	SHAFT (C) mm
66	106	126

Rigid Ø 80 ducting (A) mm	SHAFT (B) mm	SHAFT (C) mm
86	126	146

Flexible Ø 80 ducting (A) mm	SHAFT (B) mm	SHAFT (C) mm
90	130	150

Kit composition:

Ref.	Qty	Description
1	1	Door adaptor Ø 100 or Ø 125
2	1	Door gasket made of neoprene
3	4	Screws 4.2 x 9 AF
4	1	Hex headed screw M6 x 20
5	1	Flat nylon washer M6
6	2	Door hole closure metal-sheet plate plug
7	1	Plug gasket made of neoprene
8	1	Toothed washer M6
9	1	Nut M6
10	1 (kit 80/125)	Concentric gasket Ø 60-100
11	1 (kit 80/125)	Flanged adapter Ø 80-125)
12	4 (kit 80/125)	Hex headed screws M4 x 16 slotted
-	1 (kit 80/125)	Bag of lubricating talc

Supplied separately:

Ref.	Qty	Description
A	1	Ducting kit door

Installation drawings key:

(1) Unique identification of the component in the kit

[A] Identification of the component not supplied in this kit

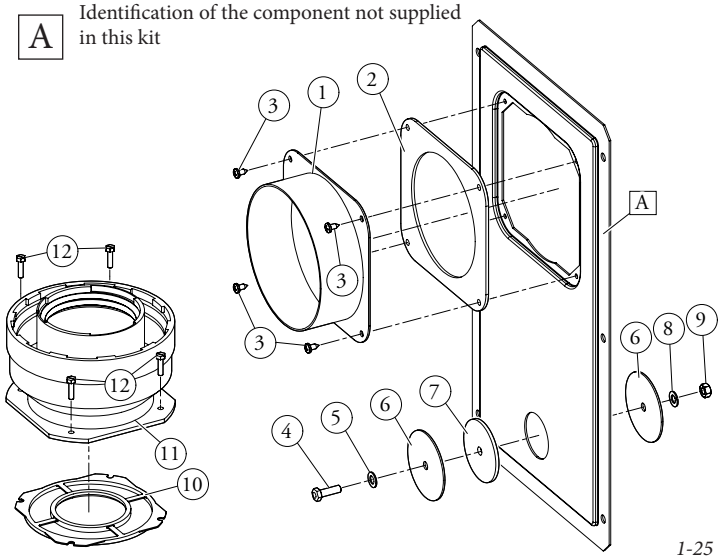

1-25

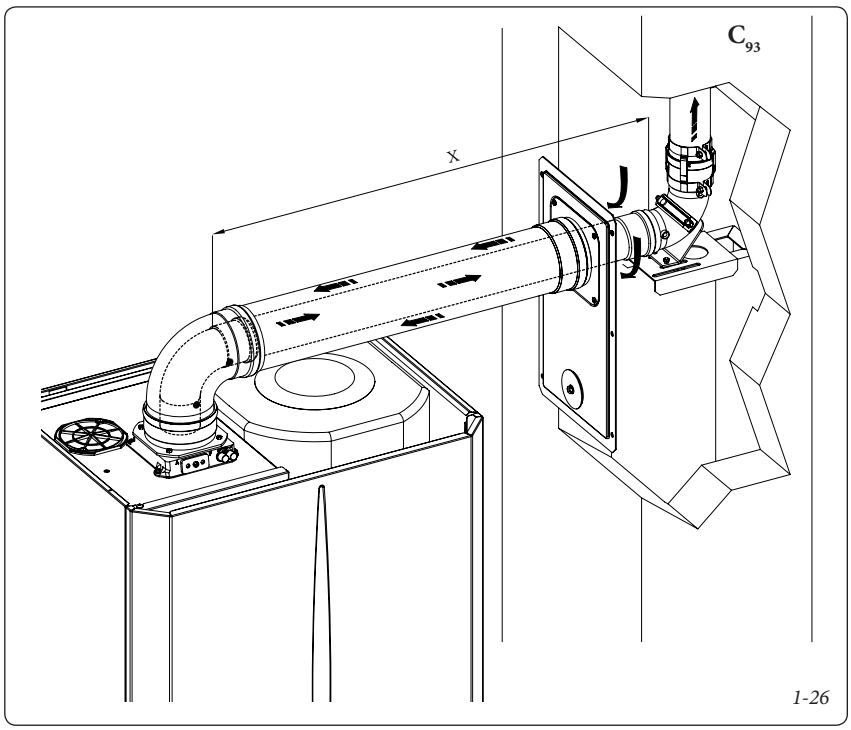

1-26

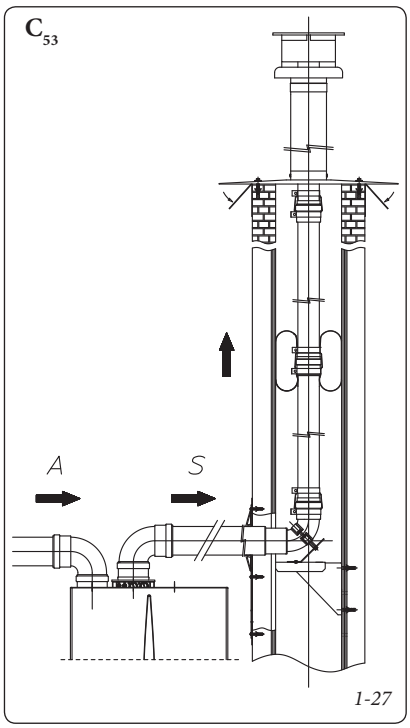

1-27

1.16 DUCTING OF FLUES OR TECHNICAL SLOTS.

Ducting is an operation through which, via the introduction of one or more relevant pipes, one achieves a system for the evacuation of the combustion products of a gas appliance, made up from the coupling of an existing or new ducting pipe with a chimney, flue or technical slot (also in new buildings) (Fig. 1-27). Ducting requires ducts declared to be suitable for the purpose by the manufacturer, following the installation and user instructions, provided by the manufacturer and the requirements of the standards in force.

Immergas ducting system. *The Ø 60 rigid and Ø 80 flexible "Green Range" ducting systems must only be used for domestic use and with Immergas condensing boilers.*

In any case, ducting operations must respect the provisions contained in the standard and in current technical regulations. The instructions in the project or technical report must likewise be followed, in cases provided for by the standard and current technical regulations. The system or components of the system have a technical life complying with current standards, provided that:

- it is used in average atmospheric and environmental conditions, according to current regulations (absence of fumes, dusts or gases that can alter the normal thermophysical or chemical conditions; existence of temperatures coming within the standard range of daily variation, etc.).
- Installation and maintenance must be performed according to the indications supplied by the manufacturer and in compliance with the provisions in force.
- The max. possible length of the Ø 60 flexible ducting vertical section is equal to 22 m. This length is obtained considering the complete Ø 80 exhaust terminal, 1m of Ø 80 pipe in exhaust, two 90° Ø 80 bends at boiler outlet.
- The max. possible length of the Ø 80 flexible ducting vertical section is equal to 30 m. This length is obtained considering the complete exhaust terminal, 1m of Ø 80 pipe in exhaust, two 90° Ø 80 bends at boiler outlet for connecting to the ducting system and two direction changes of the flexible hose inside the chimney/technical slot.
- The maximum possible length of the Ø 80 rigid ducting vertical section is equal to 30 m. This length is obtained considering the complete Ø 80 exhaust terminal, 1m of Ø 80 pipe in exhaust, two 90° Ø 80 bends on the boiler outlet.

1.17 CONFIGURATION TYPE B, OPEN CHAMBER AND FAN ASSISTED FOR INDOORS.

The appliance can be installed inside buildings in $_{23}$ or B_{53} mode; in this case, all technical rules and national and local regulations in force, must be complied with.

- type B open chamber boilers must not be installed in places where commercial, artisan or industrial activities take place, which use products that may develop volatile vapours or substances (e.g. acid vapours, glues, paints, solvents, combustibles, etc.), as well as dusts (e.g. dust deriving from the working of wood, coal fines, cement, etc.), which may be harmful for the components of the appliance and jeopardise operation.
- in B_{23} and B_{53} configuration, the boilers must not be installed in bedrooms, bathrooms or in studio flats unless otherwise provided by local regulations.
- The installation of appliances in B_{23} and B_{53} configurations are only recommended outdoors (in a partially-protected place) or in places that are not lived in and which are permanently ventilated.

For installation the cover kit must be used, referred to in paragraph 1.11.

1.18 FLUE GAS EXHAUST TO FLUE/ CHIMNEY.

The flue exhaust does not necessarily have to be connected to a branched type traditional flue. The flue exhaust, for boiler clots installed in C configuration, can be connected to a special LAS type multiple flue. For B configurations, exhaust is only allowed into individual chimney or directly into the external atmosphere via a relevant terminal, unless otherwise provided by local regulations. The multiple flues and the combined flues must also only be connected to type C appliances of the same type (condensing), having nominal heat inputs that do not differ by more than 30% less with respect to the maximum that can be attached and powered by the same fuel. The thermo-fluid dynamic features (flue flow rate, % of carbon dioxide, % humidity etc....) of the appliances attached to the same multiple flues or combined flues, must not differ by more than 10% with respect to the average boiler attached. Multiple and combined flues must be specially designed according to the calculation method and requirements of the standards (e.g. EN 13384), by professionally qualified technical staff. Chimney or flue sections for connection of the exhaust pipe must comply with requisites of technical standards in force.

1.19 FLUES, CHIMNEYS, CHIMNEY POTS AND TERMINALS.

The flues, chimneys and chimney pots for the evacuation of combustion products must be in compliance with applicable standards. Chimneys and roof-installed exhaust terminals must comply with the outlet height and with the distance from technical volumes set forth by the technical standards in force.

Positioning the wall flue exhaust terminals. The wall flue exhaust terminals must:
- be installed on external perimeter walls of the building;
- be positioned according to the minimum distances specified in current technical standards.

Combustion products exhaust of natural draught or fan assisted appliances in open-top closed environments. In spaces closed on all sides with open tops (ventilation pits, courtyards etc.), direct flue gas exhaust is allowed for natural or forced draught gas appliances with a heating power range from 4 to 35 kW, provided the conditions as per the current technical standards are respected.

1.20 SYSTEM FILLING.

Once the boiler is connected, proceed with system filling via the filling cock (Fig. 1-29 and 2-8). Filling is performed at low speed to ensure release of air bubbles in the water via the boiler and heating system vents.
The boiler has a built-in automatic venting valve on the circulator. *Check if the cap is loose.* Open the radiator vent valves.
Close radiator vent valves when only water escapes from them.
Close the filling cock when the boiler pressure gauge indicates approx. 1.2 bar.

N.B.: during these operations, turn on the circulating pump at intervals using the main switch on the control panel. *Vent the circulation pump by loosening the front cap and keeping the motor running.* Screw the cap back on after the operation.

1.21 CONDENSATE TRAP FILLING.

On first lighting of the boiler, flue gas may come out the condensate drain; after a few minutes' operation check that this no longer occurs. This means that the drain trap is filled with condensate to the correct level preventing the passage of flue gas.

1.22 GAS SYSTEM START-UP.

To start up the system, refer to the technical standard in force.
In particular, for new gas systems:
- open windows and doors;
- avoid presence of sparks or open flames;
- bleed all air from the pipelines;
- check that the internal system is properly sealed according to the specifications set forth by technical regulations in force.

1.23 BOILER START UP (IGNITION).

To commission the boiler (the operations listed below must only be performed by qualified personnel and in the presence of professionals only):
- check that the internal system is properly sealed according to the specifications set forth by technical regulations in force;
- make sure that the type of gas used corresponds to boiler settings;
- Check that there are external factors that may cause the formation of fuel pockets;
- switch the boiler on and check correct ignition;
- make sure that the gas flow rate and relevant pressure values comply with those given in the manual (Par. 3.18);
- ensure that the safety device intervenes in the event of gas supply failure and check the relative intervention time;
- check the intervention of the main switch located upstream from the boiler and in the boiler;
- check that the intake/exhaust concentric terminal (if fitted) is not blocked.

The boiler must not be started up even if only one of the checks should be negative.

1.24 CIRCULATION PUMP.

The boilers are supplied with a variable speed circulator pump. When the boiler is in central heating mode the circulator speed is defined by setting parameter "P57" in the configuration menu (M5), in DHW mode the circulator always works at the same speed.

During the heating stage the Auto and Fixed operating modes are available.

N.B.: the ΔT can be controlled compatibly with the characteristics of the central heating system and of the boiler.

- **Auto:** automatic pump speed. In this mode one can choose between the "Proportional head" and "Constant ΔT" option.

  Furthermore, within the parameter it is possible to adjust the operation range of the circulator setting limit speed (adjustable from 83 % for model Victrix Zeus Superior 26 2 ErP and 100 % for model Victrix Zeus Superior 32 2 ErP at 65 %) and minimum speed (adjustable from 65 % to max. set speed)

  - **Proportional head (ΔT = 0):** the circulator speed varies according to the power emitted by the burner, the greater the power the greater the speed.
  - **ΔT Constant (ΔT = 5 ÷ 25 K):** the pump speed varies to maintain the ΔT constant between the system flow and return according to set value K.

- **Fixed (100 % ÷ 65 %):** in this mode the circulator works at constant speed, the operating range is defined between minimum (65 %) and maximum (83% for Victrix Zeus Superior 26 2 ErP and 100 % for Victrix Zeus Superior 32 2 ErP).

N.B.: for the boiler to work properly, it is not allowed to drop below the minimum value indicated above.

Possible pump release. Manually release the motor shaft by acting on the screw in the centre of the head, press with a slotted screwdriver in axial direction and carefully rotate the motor shaft.

By-pass Regulation (part. 32 Fig. 1-29). The boiler is supplied with by-pass closed by 1.5 turns with respect to all open.
If necessary, the by-pass can be regulated to system requirements from minimum (by-pass closed) to maximum (by-pass open). Adjust using a flat head screwdriver, turn clockwise to close the by-pass; turn anti-clockwise to open it.

Head available to the system.

1-28

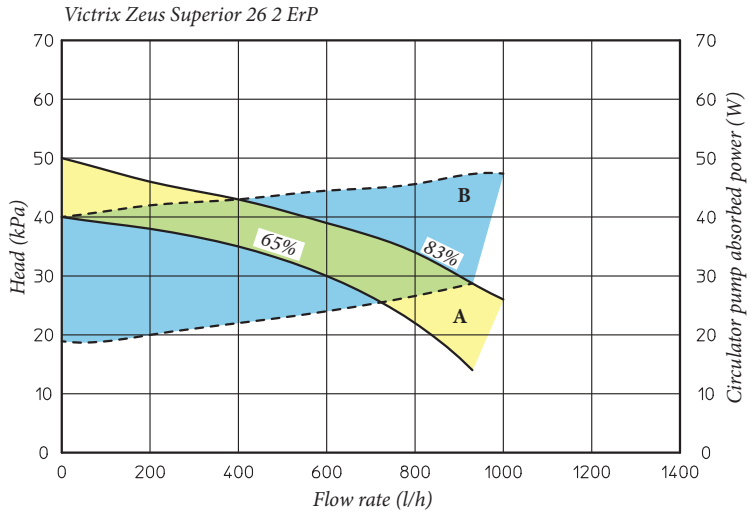

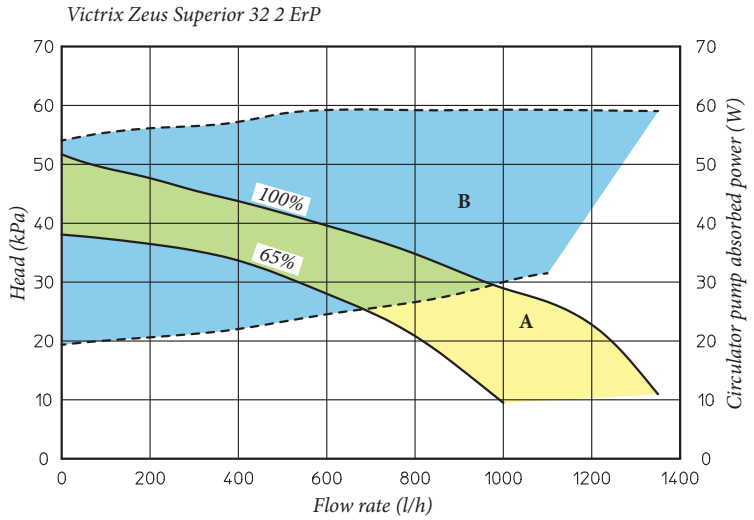

Key:
A = Head available with by-pass closed by 1.5 turns with respect to all open
B = Power absorbed by the circulator pump (dotted area)

1.25 KITS AVAILABLE ON REQUEST.

- System shut-off valve kits with or without inspection filter (on request). The boiler is designed for installation of system interception cocks to be placed on flow and return pipes of the connection assembly. This kit is very useful for maintenance because it allows to empty just the boiler without having to empty the entire system. Moreover, the version with filter preserves the functioning characteristics of the boiler thanks to its inspectionable filter.
- System zone control unit kit (on request). If the heating system is to be divided into several zones **(max. three),** in order to interlock them with separate adjustments and to keep water flow rate high for each zone, Immergas supplies zone system kits by request.
- Polyphosphate dispenser kit (on request). The polyphosphate dispenser reduces the formation of lime-scale and preserves the original heat exchange and domestic hot water production conditions. The boiler is prepared for application of the polyphosphate dispenser kit.
- Relay board (on request). The boiler is prepared for the installation of a relay card that allows to increase the features of the appliance and therefore functioning possibilities.
- Cover kit (on request). If installed outdoors in a partially protected place with direct air intake,it is compulsory to mount the appropriate top protection cover for the correct functioning of the boiler and to protect it from adverse weather conditions.
- Recirculation kit (on request). The boiler storage tank unit is prepared for application of the pump kit. Immergas supplies a series of fittings and attachments that allow connection between the storage tank unit and domestic hot water system. The pump kit attachment is also envisioned on the template.

The above-mentioned kits are supplied complete with instructions for assembly and use.

1.26 BOILER COMPONENTS.

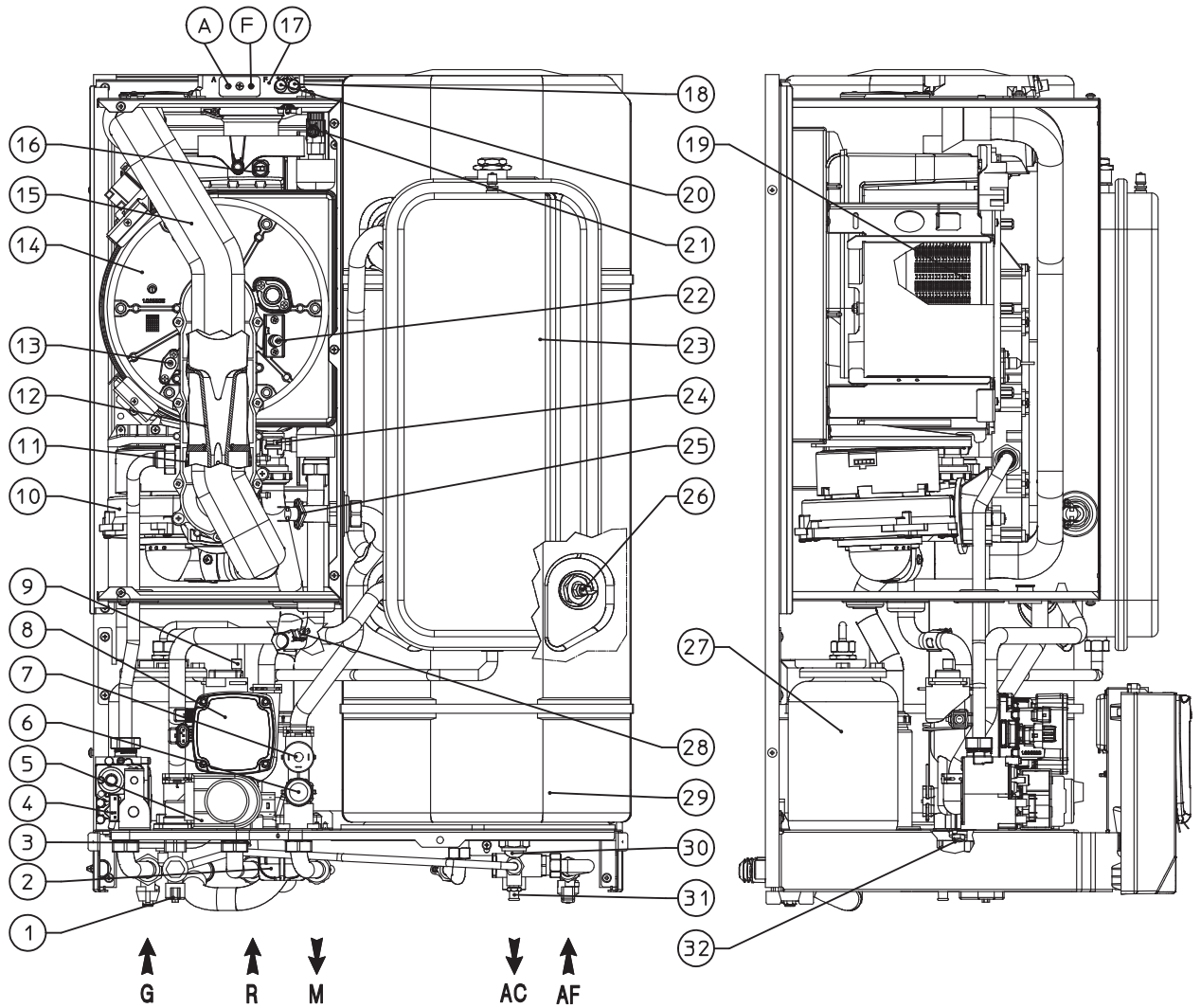

Key:

1 - System filling valve
2 - Condensate drain trap
3 - System draining valve
4 - Gas valve
5 - Three-way valve (motorised)
6 - 3 bar safety valve
7 - System pressure switch
8 - Boiler circulator pump
9 - Vent valve
10 - Fan
11 - Gas nozzle
12 - Venturi
13 - Detection electrode
14 - Condensation module
15 - Air intake pipe
16 - Flue probe
17 - Sample points (air A) - (flue gas F)
18 - Negative signal pressure point
19 - Burner
20 - Positive signal pressure point
21 - Manual air vent valve
22 - Ignition electrodes
23 - System expansion vessel
24 - Flow probe
25 - Safety thermostat
26 - Domestic hot water probe
27 - D.H.W. expansion vessel
28 - Return probe
29 - Stainless steel storage tank
30 - 8 bar safety valve
31 - Storage tank unit draining valve
32 - Adjustable by-pass

1-29

2 USE AND MAINTENANCE INSTRUCTIONS

2.1 CLEANING AND MAINTENANCE.

Attention: to preserve the boiler's integrity and keep the safety features, performance and reliability, which distinguish it, unchanged over time, you must at least execute maintenance operations on a yearly basis in compliance with what is stated in the relative point at "annual check and maintenance of the appliance".

2.2 GENERAL WARNINGS.

Never expose the wall-mounted boiler to direct vapours from cooking hobs.
Use of the boiler by unskilled persons or children is prohibited.
For safety purposes, check that the concentric air intake/flue exhaust terminal (if fitted), is not blocked, even just temporarily.
If temporary shutdown of the boiler is required, proceed as follows:
a) drain the water system if antifreeze is not used;

b) shut-off all electrical, water and gas supplies.

In the event of work or maintenance on structures located in the vicinity of ducting or devices for flue extraction and relative accessories, switch off the appliance and on completion of operations ensure that a qualified technician checks the efficiency of the ducting or other devices.
Never clean the appliance or connected parts with easily flammable substances.
Never leave containers or flammable substances in the same environment as the appliance.

- **Attention:** the use of components involving use of electrical power requires some fundamental rules to be observed, such as:
  - do not touch the appliance with wet or moist parts of the body; do not touch when barefoot;
  - never pull electrical cables nor leave the appliance exposed to weathering (rain, sunlight, etc.);
  - the appliance power cable must not be replaced by the user;
  - in the event of damage to the cable, switch off the appliance and contact exclusively qualified staff for replacement;
  - if the appliance is not to be used for a certain period, disconnect the main power switch.

N.B.: the temperatures indicated by the display have a tolerance of +/- 3°C due to environmental conditions that cannot be attributed to the boiler.

At the end of its service life the appliance must not be disposed of like normal household waste nor abandoned in the environment, but must be removed by a professionally qualified firm. Contact the manufacturer for disposal instructions.

2.3 CONTROL PANEL.

Key:

- ⏻ - *Stand-by - On Button*
- **A** - *Summer* ( ) *and winter* ( ) *operating mode button*
- **B** - *DHW priority button* ( )
- **C** - *Reset* (RESET) / *exit menu* (ESC) *button*
- **D** - *Menu entry button (*MENU*)/ data confirmation* (OK) *button*
- *1 - Domestic hot water temperature selector*
- *2 - Domestic hot water temperature set*
- *3 - Central heating temperature selector*
- *4 - Central heating temperature set*
- *4 - Presence of anomalies*
- *6 - Display of boiler functioning status*
- *8 - Flame presence symbol and relative power scale*
- *9 and 7 - Primary heat exchanger outlet water temperature*
- *10 - Boiler in stand-by*
- *11 - Boiler connected to remote control (Optional)*
- *12 - Functioning in summer mode*
- *13 - Antifreeze function in progress*
- *14 - Functioning in winter mode*
- *15 - Domestic hot water priority functioning active*
- *16 - Presence of external connected devices*
- *17 - Display of menu items*
- *18 - Functioning with external temperature probe active*
- *19 - Display of data confirmation or menu access*
- *20 and 7 - Outside temperature display with external probe connected (optional)*
- *21 - Display of reset or exit menu request*
- *22 - Chimney sweep function in progress*
- *23 - Boiler manometer*
- *24 - Multi-function display*

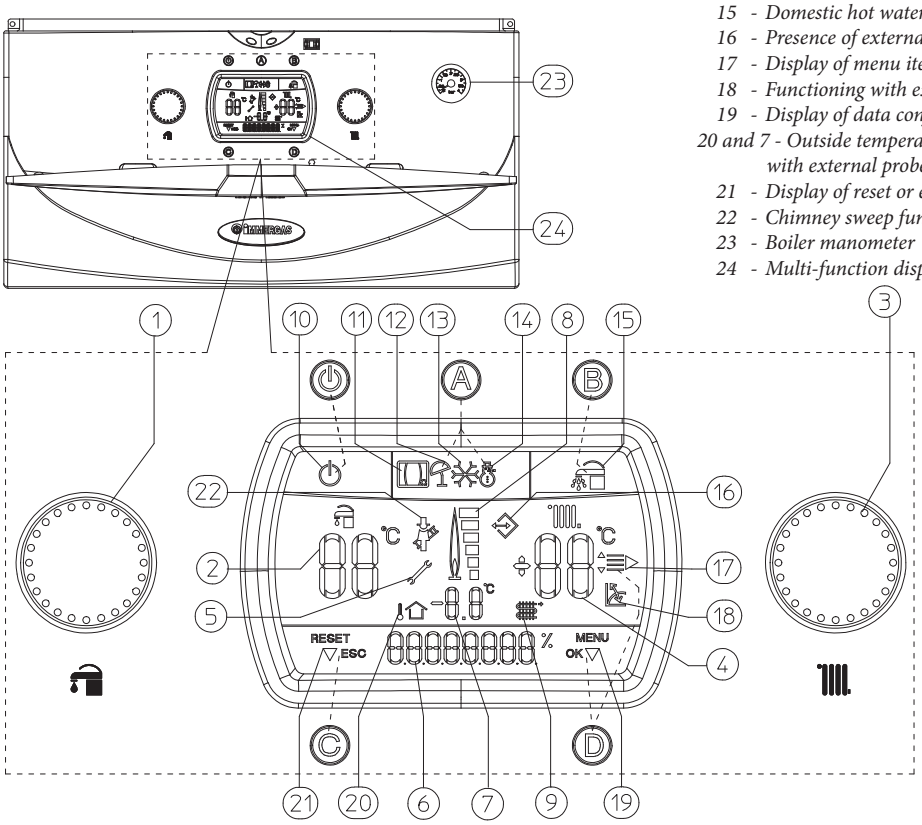

2-1

2.4 DESCRIPTION OF FUNCTIONING STATES

Below find a list of boiler functioning states that appear on the multifunction display (24) by means of the indicator (6) with a brief description. Refer to the instruction book for a complete explanation.

Display (6)	Description of functioning states
SUMMER	Summer functioning mode without request in progress. Boiler in stand-by for domestic hot water request.
WINTER	Winter functioning mode without request in progress. Boiler in stand-by for domestic hot water or central heating request.
DHW ON	Domestic hot water mode in progress. Boiler functioning, domestic hot water heating in progress.
CH ON	Central heating mode in progress. Boiler functioning, central heating in progress.
F3	Antifreeze mode in progress. Boiler functioning to restore the minimum safety temperature against boiler freezing.
CAR OFF	Remote Control (Optional) off.
DHW OFF	With domestic hot water priority disabled (indicator 15 off), the boiler only functions in room central heating mode for duration of 1 hour, however keeping the domestic hot water at minimum temperature (20°C), after which the boiler goes back to the normal functioning, previously set. In the case of use with Super CAR in concomitance with the functioning period in reduced D.H.W. Timer mode, DHW OFF will appear on the display and indicators 15 and 2 switch off (see Super CAR instructions manual).
F4	Postventilation in progress. Fan in function after a request for domestic hot water or central heating in order to evacuate residual flue gas.
F5	Postcirculation in progress. Pump in function after a request for domestic hot water or central heating in order to cool the primary circuit.
P33	With Remote Control (Optional) or room thermostat (TA) (Optional) in block, the boiler functions all the same in central heating mode. (Can be activated through menu "M3". It allows you to activate the central heating even if the Remote Control or TA are out of order).
STOP	Reset attempts finished Wait for 1 hour to re-acquire 1 attempt. (See No ignition block).
ERR xx	Anomaly present with relative error code. The boiler does not work. (see troubleshooting paragraph).
SET	When the domestic hot water temperature selector switch is turned (1 Fig. 2-1) it displays the control status of the domestic hot water temperature in progress.
SET	When the central heating temperature selector switch is turned (1 Fig. 2-1) it displays the control status of the boiler flow temperature for room central heating.
SET	In the presence of the external probe (optional) replace the "SET" item. The value that appears is the correction of the flow temperature with respect to the functioning curve set by the external probe. See OFFSET on external probe graphics (Fig. 1-7).
F8	System deaeration in progress. During this phase, which lasts 18 hours, the boiler circulator pump is started at preset intervals, thus allowing deaeration of the central heating system.
F9	Only in the case of use with Super CAR, does it allow to activate the anti-legionella function, which takes the temperature of the water in the storage tank to 65°C for 15 minutes. (see Super CAR instruction manual).

2.5 USING THE BOILER.

Before ignition make sure the central heating system is filled with water and that the manometer (23) indicates a pressure of 1 - 1.2 bar;
Open the gas cock upstream from the boiler.

With the boiler off, only the Stand-by symbol (10) appears on the display. By pressing the ( ) button the boiler switches on.
Once the boiler is on, by pressing button "A" repeatedly, the functioning mode changes and switches from summer functioning mode ( ) to winter functioning mode ( ).

- **Summer ( ):** in this mode the boiler functions only to heat domestic hot water. The temperature is set using the selector switch (1) and the relative temperature is shown on the display (24) by means of the indicator (2) and the "SET" indication appears (Fig. 2-2). By turning the selector switch (1) in a clockwise direction the temperature increases and in an anti-clockwise direction it decreases.

Adjustment of domestic hot water

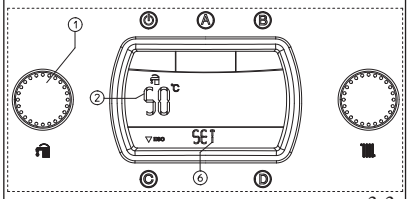

2-2

During domestic hot water heating, "DHW ON" appears on the display (24) on the status indicator (6) and at the same time as the burner ignites, the flame presence indicator switches on (8) with the relative power scale and the indicator (9 and 7) with the instantaneous outlet temperature from the primary heat exchanger.

Summer mode operation with domestic hot water heating

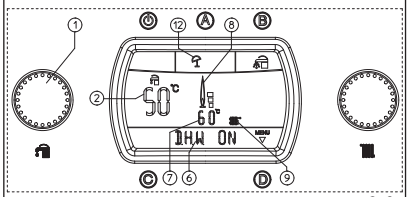

2-3

- **Winter ( ):** in this mode the boiler functions both for heating domestic hot water and heating the environment. The temperature of the domestic hot water is always adjusted using the selector switch (1), the central heating temperature is adjusted using the selector switch (3) and the relative temperature is shown on the display (24) using the indicator (4) and the "SET" indication appears (Fig. 2-4). By turning the selector switch (3) in a clockwise direction the temperature increases and in an anti-clockwise direction it decreases.

Adjustment of the system flow temperature

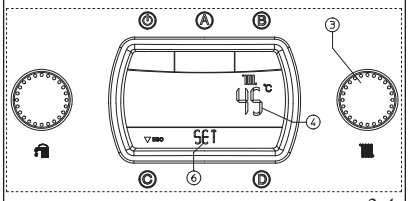

2-4

During the request for room heating "CH ON" appears on the display (24) on the status indicator (6) and at the same time as burner ignition the flame presence indicator switches on (8) with relative power scale and the indicator (9 and 7) with the instantaneous outlet temperature from the primary heat exchanger. In the central heating phase, if the temperature of the water contained in the system is sufficient to heat the radiators, the boiler can only function with the activation of the boiler pump.

Winter mode operation with central heating

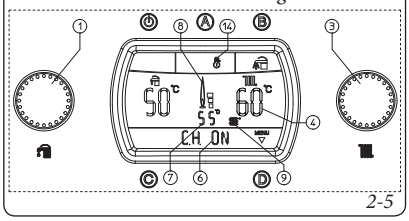

2-5

- **Operation with Comando Amico Remoto remote control V2 (CAR V2) (Optional).** In the event of connection to the CAR V2 remote control, the boiler automatically detects the device and the symbol ( ) is displayed. From this moment onwards all controls and adjustments are referred to the CAR V2. The stand-by button " ", the Reset button "C", the menu access button "D" and the DHW priority button "B" however remain active on the boiler.

  Attention: If the boiler is put into stand-by (10) the "CON" connection error symbol will appear on the CAR V2 remote control. The CAR V2 remote control is however powered constantly so as not to loose stored programs.

- **Operation with Super Comando Amico Remoto remote control (Super CAR) (Optional).** In the event of connection to the Super CAR remote control, the boiler automatically detects the device and the ( ) symbol appears on the display. From this moment it is possible to make adjustments indifferently from the Super CAR remote control or the boiler. Except for the central heating temperature that is shown on the display but managed by the Super CAR remote control.

  Attention: If the boiler is put into stand-by (10) the "ERR>CM" connection error symbol will appear on the Super CAR. The Super CAR remote control is however powered constantly so as not to loose memorised programs.

- **Domestic hot water priority function.** By pressing button "B" the D.H.W. priority function is activated, which is marked by the symbol (15) switching off on the display (24). The disabled function keeps the water contained in the storage tank at a temperature of 20°C for 1 hour, giving the functioning priority to room central heating.

- **Functioning with external probe (Fig. 2-6) optional.** In the case of a system with optional external probe, the boiler flow temperature for room central heating is managed by the external probe depending on the external temperature measured (Par. 1.9 and par. 3.8 under item "P66"). It is possible to modify the flow temperature from -15°C to +15°C with respect to the adjustment curve (Fig. 1-8 Offset value). This correction, which can be activated using selector (3) is kept active for any external temperature measured. The modification of the offset temperature is displayed via the indicator (7). The indicator (4) shows the current flow temperature and after a few seconds from the modification it is updated with the new correction. The "SET" indication is displayed (Fig. 2-6). By turning the selector switch (3) in a clockwise direction the temperature increases and in an anti-clockwise direction it decreases.

System flow temperature adjustment with external probe(optional)

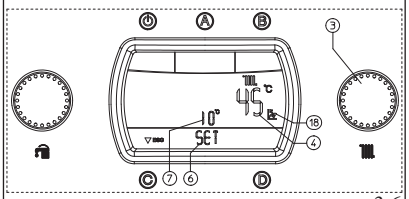

2-6

During the request for room heating "CH ON" appears on the display (24) on the status indicator (6) and at the same time as burner ignition the flame presence indicator switches on (8) with relative power scale and the indicator (9 and 7) with the instantaneous outlet temperature from the primary heat exchanger. In the central heating phase, if the temperature of the water contained in the system is sufficient to heat the radiators, the boiler can only function with the activation of the boiler pump.

Winter operation mode with external probe (optional)

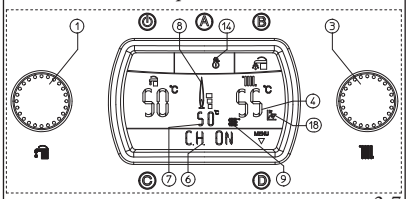

2-7

From this moment the boiler functions automatically. With no demand for heat (central heating or domestic hot water production) the boiler goes to "standby" function, equivalent to the boiler being powered without presence of flame.

N.B.: The boiler may start-up automatically if the anti-freeze function is activated (13). Moreover, the boiler can function for a brief period of time after a withdrawal of domestic hot water in order to take the domestic hot water temperature back into temperature.

Attention: with the boiler in stand-by mode ( ), hot water cannot be produced and the following safety functions are not ensured: pump anti-block device, antifreeze and three-way anti-block device.

2.6 TROUBLESHOOTING.

The Victrix Zeus Superior ErP boiler signals any anomalies by the flashing symbol (5) along with the "ERRxx" indication on the indicator (6) where "xx" corresponds to the error code described in the following table. On the remote control, the error code will be displayed by means of the same numeric code represented according to the following example (e.g. CAR^{V2} = Exx, Super CAR = ERR>xx).

Error Code	Anomaly signalled	Cause	Boiler status / Solution
01	**No ignition block**	In the event of request of room central heating or domestic hot water production, the boiler does not switch on within the preset time. Upon appliance commissioning or after extended downtime, it may be necessary to eliminate the block.	Press the Reset button (1)
02	**Safety thermostat block (overheating), flame control anomaly**	During normal operation, if a fault causes excessive overheating internally, the boiler goes into overheating block.	Press the Reset button (1)
03	**Flue safety thermostat block**	During normal operation, if a fault causes excessive flue gas overheating, the boiler blocks	Press the Reset button (1)
04	**Contacts resistance block**	Safety thermostat fault (overheating) or flame control anomaly.	The boiler does not start (1)
05	**Flow probe anomaly**	The board detects an anomaly on the flow NTC probe.	The boiler does not start (1)
08	**Maximum N° of reset**	Number of allowed resets that have already performed.	**Attention:** the anomaly can be reset 5 times consecutively, after which the function in inhibited for at least one hour. One attempt is gained every hour for a maximum of 5 attempts. By switching the appliance on and off the 5 attempts are re-acquired.
10	**Insufficient system pressure**	Water pressure inside the central heating circuit that is sufficient to guarantee the correct operation of the boiler is not detected.	Check on the boiler pressure gauge (1) that the system pressure is between 1÷1.2 bar and restore the correct pressure if necessary.
12	**Storage tank probe anomaly**	The board detects an anomaly on the storage tank probe.	The boiler cannot produce domestic hot water, domestic water heating is carried out by the solar system and Pdc (1).
15	**Configuration error**	If the board detects an anomaly or incongruity on the electric wiring, the boiler will not start.	If normal conditions are restored the boiler restarts without having to be reset (1)
16	**Fan anomaly**	This occurs if the fan has a mechanical or electrical fault.	Press the Reset button (1)
20	**Parasite flame block**	This occurs in the event of a leak on the detection circuit or anomaly in the flame control unit.	Press the Reset button (1)
22	**General alarm**	This type of error is displayed on the CAR ^{V2} or Super CAR remote control in the event of faults or anomalies of the circuit boards or components not directly connected to boiler management: anomaly on the zones control unit, substation or solar circuit.	(1)
23	**Return probe anomaly**	The board detects an anomaly on the return NTC probe	The boiler does not start (1)
24	**Push button control panel anomaly**	The board detects an anomaly on the pushbutton panel	If normal conditions are restored the boiler restarts without having to be reset (1)
25	**Block due to flue gas temperature gradient intervention**	If the board detects a rapid increase in flue gas temperature probably due to a blocked circulating pump or lack of water in the heat exchanger, the boiler shuts down due to the flue gas temperature gradient trip.	Press the Reset button (1)
27	**Insufficient circulation**	This occurs if there is overheating in the boiler due to insufficient water circulating in the primary circuit; the causes can be: - low system circulation; check that no shut-off devices are closed on the heating circuit and that the system is free of air (deaerated); - pump blocked; free the pump.	Press the Reset button (1).

(1) If the shutdown or fault persists, contact an authorised company (e.g. Authorised Technical After-Sales Service).
(2) This anomaly is not displayed by the CAR^{V2} and Super CAR.

Error Code	Anomaly signalled	Cause	Boiler status / Solution
29	**Flue probe anomaly**	If the board detects an anomaly on the flue gas probe the boiler will not start	(1)
31	**Loss of remote control communication**	This occurs in the event of connection to a non compatible remote control or if there is a communication breakdown between boiler and CAR ^{V2} or Super CAR remote control.	Power cycle the boiler. If the Remote Control is still not detected on re-starting the boiler will switch to local operating mode, i.e. using the controls on the control panel. In this case the "CH ON" function cannot be activated. To make the boiler work in "" mode in any case, activate the "P33" function in the "M3" menu (1) (2).
36	**IMG Bus communication loss**	Communication between the control units is interrupted due to an anomaly on the boiler control unit or on the IMG Bus.	The boiler does not satisfy the room heating requests (1) (2).
37	**Low power supply voltage**	This occurs when the power supply voltage is lower than the allowed limits for the correct boiler operation.	If normal conditions are restored the boiler restarts without having to be reset (1) (2).
38	**Loss of flame signal**	This occurs when the boiler is ignited correctly and the burner flame switches off unexpectedly; a new ignition attempt is performed and if normal conditions are restored, the boiler does not need to be reset (this fault can be checked in the list of errors in the "M1" menu only).	If normal conditions are restored the boiler restarts without having to be reset (1) (2).
45	**ΔT high**	The boiler detects a sudden, unexpected increase in the ΔT between the flow probe and the system return probe.	The power of the burner is limited to prevent damage to the condensation module and once the right ΔT is restored, the boiler returns to regular operation. Make sure there is water circulating in the boiler, that the pump is configured according to system requirements and that the return probe works properly. (1) (2).
47	**Burner power limitation**	In the event the heat exchanger is blocked, the boiler reduces the power supplied so as not to damage it.	(1) (2)
49	**High temperature block on return probe**	This occurs when the heat exchanger return circuit reaches a temperature that is too high.	Make sure that water circulates properly in the boiler and that the three-way valve works properly. Press the Reset button (1) (2).

(1) If the shutdown or fault persists, contact an authorised company (e.g. Authorised Technical After-Sales Service).
(2) This anomaly is not displayed by the CAR^{V2} and Super CAR.

2.7 PARAMETERS AND INFORMATION MENU.

By pressing the button "D" it is possible to access a menu divided into three main parts:
- "M1" information
- "M3" customisations
- "M5" configurations: menu reserved to the technician and for which a password is required (See "Maintenance" chapter).

By turning the central heating temperature selector switch (3) scroll through the menu items. By pressing button "D" access the various levels of the menu and the choice of parameters is confirmed. Press button "C" to go back one level.

"M1" information menu. This menu contains the various information relative to boiler functioning:

1st Level	Button	2nd Level	Button	3rd Level	Button	Description
M1	D ⇨ ⇦ C	P11	D ⇨ ⇦ C			View the management software version of the P.C.B. installed in the boiler
		P12				View the total functioning hours of the boiler
		P13				View the number of burner ignitions
		P14 (with optional external probe present) – – – (without external probe (optional)	D ⇨ ⇦ C	P14/A		View the current external temperature (if optional external probe present)
				P14/B		View the minimum external temperature recorded (if optional external probe present)
				P14/C		View the maximum external temperature recorded (if optional external probe present)
				RESET	D x select ⇦ C	By pressing button "D" the MIN and MAX temperatures measured are reset to zero
		P15	D ⇨ ⇦ C			No display on this boiler model
		P17				View the speed in instantaneous revs.of the fan
		P18				View the instantaneous speed of the pump (from 1 to 3)
		P19				View the last 5 events that caused boiler shutdown. Indicator (6) shows the sequential number from 1 to 5 and on indicator (7) the relative error code. By pressing button "D" repeatedly it is possible to view the functioning time and the number of ignitions at which the anomaly occurred

Customisations Menu "M3". This menu contains all functioning options that can be customised. (The first item of the various options that appears inside the parameter is that selected by default).

Attention: if the international language is to be restored **(A1)**, proceed as follows:
- press button "D" to access the configuration menu.
- turn selector switch "3" to **"PERSONAL"**.
- press button "D" to confirm.
- turn selector switch "3" to **"DATI"**.
- press button "D" to confirm.
- turn selector switch "3" to **"LINGUA"**.
- press button "D" to confirm.
- turn selector switch "3" to **"A1"**.
- press button "D" to confirm.

At this point the international items indicated in the menu tables appear on the display.

1st Level	Button	2nd Level	Button	3rd Level	Button	4th Level	Button	Description
M3	D ⇨ ⇦ C	P31	D ⇨ ⇦ C	**AUTO (Default)**	D x select ⇦ C			The display lights up when the burner is ignited and when the controls are accessed, it remains on for 5 seconds after the last operation performed
				ON				The display is always lit up
				OFF				The display only lights up when the controls are accessed and remains on for 5 seconds after the last operation performed
		P32	D ⇨ ⇦ C	P32/B	D ⇨ ⇦ C	ITALIANO	D x select ⇦ C	All descriptions are given in Italian
						A1 (Default)		All descriptions are given in alphanumerical format
		P33	D ⇨ ⇦ C	**OFF (Default)**	D x select ⇦ C			In winter mode, by activating this function it is possible to activate the room central heating function even if the eventual Remote Control or TA are out of service.
				ON				
		RESET	D x select ⇦ C					By pressing button "D" the customisations are reset, restoring the default values of "P31" in "ILL. AUTO" and "P32/B" in "ITALIAN" set by default.

Zone Menu (optional) "M9". The "M9" zone menu is only activated if the board detects connection to an additional zone board (optional). This menu contains the temperature settings of additional zones.

1st Level	Button	2nd Level	Button	Description
M9	D ⇨ ⇦ C	P91	D ⇨ ⇦ C	Displays the current temperature of the low temperature zone number 2
		P92	D ⇨ ⇦ C	Displays the current temperature of the low temperature zone number 3
		P93	D ⇨ ⇦ C	Defines the flow temperature of the zone number 2 at low temperature. With external probe (Optional) fitted the flow temperature may be corrected with respect to the operation curve set by the external probe. See OFFSET on external probe graph (Fig. 1-6) changing temperature from -15°C to +15°C.
		P94	D x select ⇦ C	Defines the flow temperature of the zone number 3 at low temperature. With external probe (Optional) fitted the flow temperature may be corrected with respect to the operation curve set by the external probe. See OFFSET on external probe graph (Fig. 1-6) changing temperature from -15°C to +15°C.

2.8 BOILER SHUTDOWN

Switch the boiler off by pressing the " ⏻ " button, disconnect the onmipolar switch outside of the boiler and close the gas cock upstream of the appliance. Never leave the boiler switched on if left unused for prolonged periods.

2.9 RESTORING CENTRAL HEATING SYSTEM PRESSURE.

Periodically check the system water pressure. The boiler pressure gauge should read a pressure between 1 and 1.2 bar.

If the pressure falls below 1 bar (with the circuit cold) restore normal pressure via the valve located at the bottom of the boiler (Fig. 2-8).

N.B.: close the cock after the operation.

If pressure values reach around 3 bar the safety valve may be activated.

In this case, remove water from an air vent valve of a radiator until reaching pressure of 1 bar, or ask for assistance from professionally qualified personnel.

In the event of frequent pressure drops, contact qualified staff for assistance to eliminate the possible system leakage.

2.10 SYSTEM DRAINAGE.

To drain the boiler, use the special draining valve (Fig. 2-8).

Before draining, ensure that the filling cock is closed.

2.11 STORAGE TANK DRAINING.

To drain the storage tank, use the special draining valve (Fig. 2-8).

N.B.: before performing this operation, close the boiler cold water inlet valve and open any DHW system hot water valve in order to air into the cylinder.

2.12 ANTI-FREEZE PROTECTION.

The "Victrix Zeus Superior ErP" series boiler has an anti-freeze function that switches the burner on automatically when the temperature falls below 4°C (standard protection to minimum temperature of -5°C). All information relative to the anti-freeze protection is stated in Par. 1.3. In order to guarantee the integrity of the appliance and the domestic hot water heating system in zones where the temperature falls below zero, we recommend the central heating system is protected using anti-freeze liquid and installation of the Immergas Anti-freeze Kit in the boiler. In the case of prolonged inactivity (second case), we also recommend that:

- disconnect the electric power supply;
- fully drain the central heating circuit (if not protected by anti-freeze liquid), the boiler domestic hot water circuit and the condensation trap. In systems that are drained frequently, filling must be carried out with suitably treated water to eliminate hardness that can cause limescale.

In case of operation in central heating and empty domestic hot water circuit mode, it is recommended to set the temperature of the DHW (SET SAN) at minimum.

2.13 CASE CLEANING.

Use damp cloths and neutral detergent to clean the boiler casing. Never use abrasive or powder detergents.

2.14 DECOMMISSIONING.

In the event of permanent shutdown of the boiler, contact professional staff for the procedures and ensure that the electrical, water and gas supply lines are shut off and disconnected.

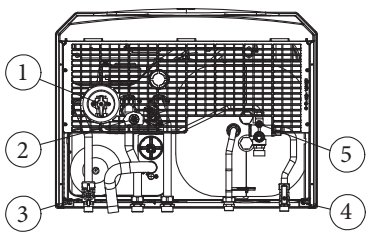

Key:

1 - System filling valve
2 - System draining valve
3 - Gas cock
4 - Cold water inlet cock
5 - Storage tank unit draining valve

2-8

3 BOILER START-UP (INITIAL CHECK)

To commission the boiler:

- make sure that the type of gas used corresponds to boiler settings;
- check connection to a 230V-50Hz power mains, correct L-N polarity and the earthing connection;
- make sure the central heating system is filled with water and that the pressure gauge indicates a pressure of 1-1.2 bar.
- make sure the air valve cap is open and that the system is well deaerated;
- switch the boiler on and check correct ignition;
- check the Δp gas values in domestic hot water and central heating modes;
- check the CO_2 in the fumes at maximum and minimum flow rate;
- check activation of the safety device in the event of no gas, as well as the relative activation time;
- check the intervention of the main switch located upstream of the boiler and in the boiler;
- check that the intake and/or exhaust terminals are not blocked;
- ensure activation of all adjustment devices;
- seal the gas flow rate regulation devices (if settings are modified);
- check the production of domestic hot water;
- check sealing efficiency of water circuits;
- check ventilation and/or aeration of the installation room where provided.

If even only a single safety check offers a negative result, do not commission the system.

3.1 PLUMBING DIAGRAM.

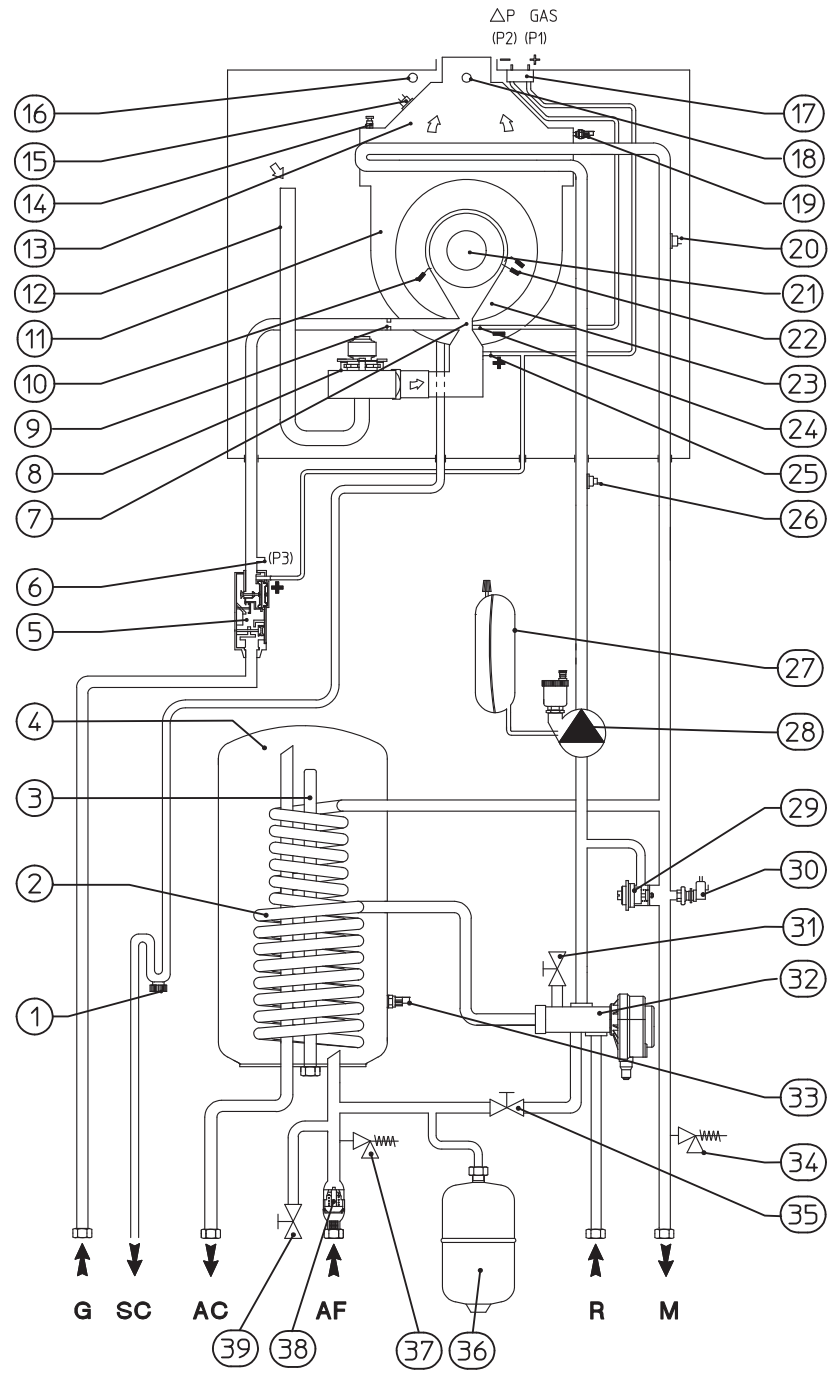

Key:

1 - *Condensate drain trap*
2 - *Stainless steel coil for storage tank*
3 - *Magnesium anode*
4 - *Stainless steel storage tank*
5 - *Gas valve*
6 - *Gas valve outlet pressure point (P3)*
7 - *Air/gas Venturi manifold*
8 - *Fan*
9 - *Gas nozzle*
10 - *Detection electrode*
11 - *Condensation module*
12 - *Air intake pipe*
13 - *Fumes hood*
14 - *Manual air vent valve*
15 - *Flue probe*
16 - *Air sample point*
17 - *Δp gas pressure point*
18 - *Flue sample point*
19 - *Flow probe*
20 - *Safety thermostat*
21 - *Burner*
22 - *Ignition electrodes*
23 - *Condensation module cover*
24 - *Venturi negative sign (P2)*
25 - *Venturi positive sign (P2)*
26 - *Return probe*
27 - *System expansion vessel*
28 - *Boiler circulator pump*
29 - *Adjustable by-pass*
30 - *System pressure switch*
31 - *System draining valve*
32 - *Three-way valve (motorised)*
33 - *Domestic hot water probe*
34 - *3 bar safety valve*
35 - *System filling valve*
36 - *D.H.W. expansion vessel*
37 - *8 bar safety valve*
38 - *Cold water inlet non-return valve*
39 - *Storage tank unit draining valve*

G - *Gas supply*
SC - *Condensate drain*
AC - *Domestic hot water outlet*
AF - *Domestic cold water inlet*
R - *System return*
M - *System flow*

3-1

3.2 WIRING DIAGRAM.

3-2

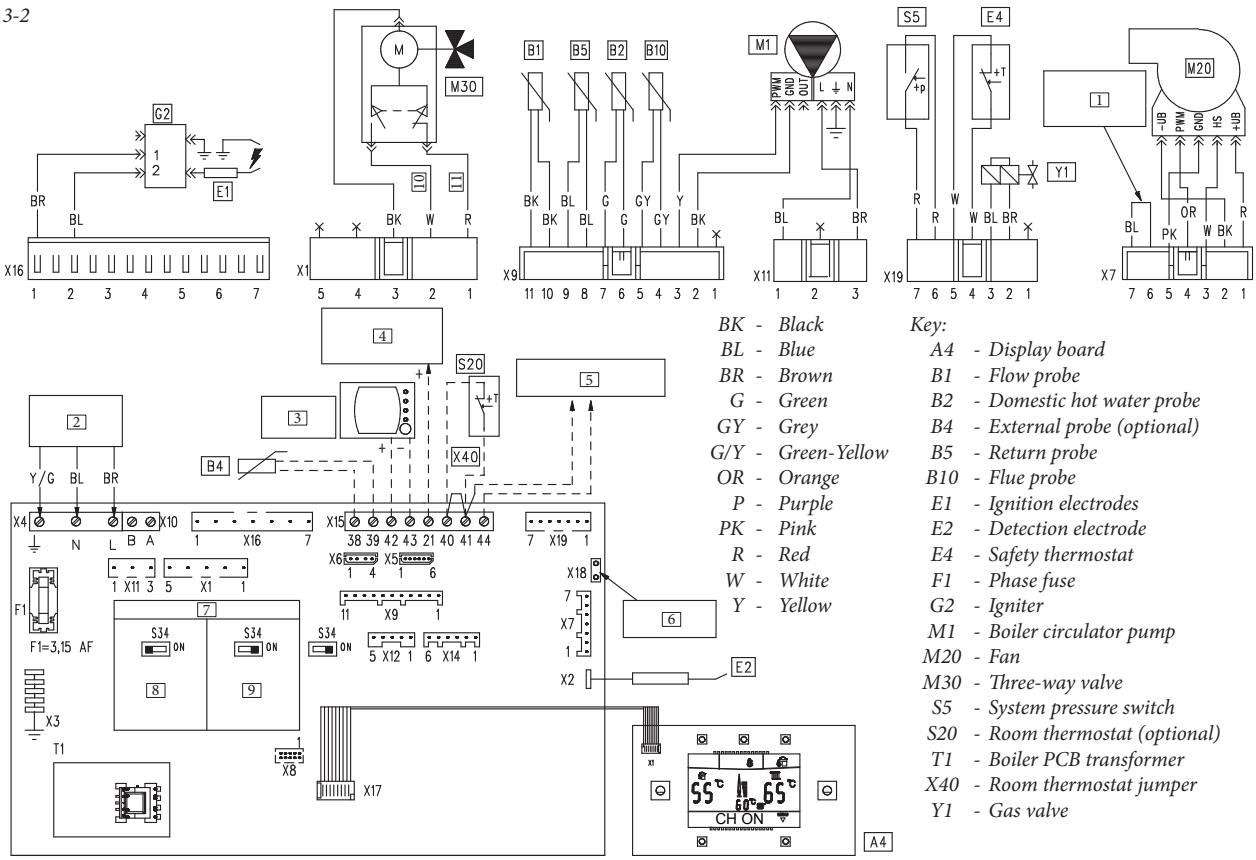

Key:

BK	-	Black
BL	-	Blue
BR	-	Brown
G	-	Green
GY	-	Grey
G/Y	-	Green-Yellow
OR	-	Orange
P	-	Purple
PK	-	Pink
R	-	Red
W	-	White
Y	-	Yellow

A4	-	Display board
B1	-	Flow probe
B2	-	Domestic hot water probe
B4	-	External probe (optional)
B5	-	Return probe
B10	-	Flue probe
E1	-	Ignition electrodes
E2	-	Detection electrode
E4	-	Safety thermostat
F1	-	Phase fuse
G2	-	Igniter
M1	-	Boiler circulator pump
M20	-	Fan
M30	-	Three-way valve
S5	-	System pressure switch
S20	-	Room thermostat (optional)
T1	-	Boiler PCB transformer
X40	-	Room thermostat jumper
Y1	-	Gas valve

1	- Storage tank configuration jumper	
2	- 230 Vac 50 Hz power supply	
3	- SUPER CAR (Optional)	
4	- Zones control unit (Optional)	
5	- IMG BUS connection	
6	- N°. of fan revs.	
7	- S34 setting	
8	- Supervisor connection active	
9	- External probe connection active	
10	- Domestic hot water	
11	- Central heating	

Remote controls: the boiler is designed for use with the Comando Amico Remoto remote control V2 (CARV2) or alternatively the Super Comando Amico Remoto remote control, which must be connected to clamps 42 and 43 of connector X15 on the P.C.B., observing polarity and eliminating jumper X40.

Room thermostat: the boiler is designed for the application of the Room Thermostat (S20). Connect it to clamps 40 – 41 eliminating jumper X40.

The connector X5 is used for the connection to the relay board.

The connector X6 is for connection to a personal computer.

The connector X8 is used for software updating operations.

3.3 TROUBLESHOOTING.

N.B.: maintenance operations must be carried out by an authorised company (e.g. Authorised After-Sales Technical Assistance Service).

- Smell of gas. Caused by leakage from gas circuit pipelines. Check sealing efficiency of gas intake circuit.
- Repeated ignition blocks. No gas, check the presence of pressure in the network and that the gas adduction cock is open. Incorrect adjustment of the gas cock, check the correct calibration of the gas valve.
- Irregular combustion or noisiness. It may be caused by: a dirty burner, incorrect combustion parameters, intake-exhaust terminal not correctly installed. Clean the above components and ensure correct installation of the terminal, check correct setting of the gas valve (Off-Set setting) and correct percentage of CO_2 in flue gas.
- Frequent interventions of the overheating safety thermostat. It can depend on the lack of water in the boiler, little water circulation in the system or blocked pump. Check on the manometer that the system pressure is within established limits. Check that the radiator valves are not closed and also the functionality of the pump.
- Drain trap clogged. This may be caused by dirt or combustion products deposited inside. Check, by means of the condensate drain cap, that there are no residues of material blocking the flow of condensate.
- Heat exchanger clogged. This may be caused by the drain trap being blocked. Check, by means of the condensate drain cap, that there are no residues of material blocking the flow of condensate.
- Noise due to air in the system. Check opening of the special air vent valve cap (Part. 9 Fig. 1-29). Make sure the system pressure and expansion vessel pre-charge values are within the set limits; The factory-set pressure values of the expansion vessel must be 1.0 bar, the value of system pressure must be between 1 and 1.2 bar.
- Noise due to air inside the condensation module. Use the manual air vent valve (Part. 21 Fig. 1-29) to eliminate any air present in the condensation module. When the operation has been performed, close the manual vent valve.
- Domestic hot water probe faulty. In order to replace the DHW probe, the storage tank does not have to be emptied as the probe is not in direct contact with the DHW inside the storage tank.

3.4 CONVERTING THE BOILER TO OTHER TYPES OF GAS.

If the boiler has to be converted to a different gas type to that specified on the data nameplate, request the relative conversion kit for quick and easy conversion.
The gas conversion operation must be carried out by an authorised company (e.g. Authorised After-Sales Technical Assistance Service).
To convert to another type of gas the following operations are required:
- disconnect the appliance;
- replace the nozzle located between the gas pipe and gas/air mixing sleeve (Part. 11 Fig. 1-29), taking care to disconnect the appliance during this operation;

- re-power the appliance;
- calibrate the number of fan revolutions (parag. 3.5):
- adjust the correct air/gas ratio (parag. 3.6);
- seal the gas flow rate regulation devices (if settings are modified);
- after completing the conversion, apply the sticker, contained in the conversion kit, near the data nameplate. Using an indelible marker pen, delete the data relative to the old type of gas.

These adjustments must be made with reference to the type of gas used, following that given in the table (Par. 3.18).

3.5 CALIBRATION OF NUMBER OF FAN REVS.

Attention: Verification and calibration is necessary, in the case of transformation to other types of gas, in the extraordinary maintenance phase with replacement of the PCB air/gas circuit components or in the case of installations with fume extraction systems, with horizontal concentric pipe measuring more than 1 metre.

The boiler heat output is correlated to the length of the air intake and flue exhaust pipes. This decreases with the increase of pipe length. The boiler leaves the factory adjusted for minimum pipe length (1m). It is therefore necessary, especially in the case of maximum pipe extension, to check the Δp gas values after at least 5 minutes of the burner operating at nominal heat output, when the temperatures of the intake air and exhaust flue gas have stabilised. Adjust the nominal and minimum heat output in the domestic hot water and central heating modes according to the values in the table (Par. 3.18) using the differential manometers connected to the Δp gas pressure points (18 and 20 Fig. 1-29).

Access the configurations menu under the "SERVICE" item and adjust the following parameters (Par. 3.8):
- boiler maximum heat output "P62";
- boiler minimum heat output "P63";
- maximum central heating output "P64";
- minimum central heating output "P65";

Below find the default settings present on the boiler:

Victrix Zeus Superior 26 2 ErP		
P62	G20: 5060 (rpm)	LPG: 4400 (rpm)
P63	G20: 1240 (rpm)	LPG: 1140 (rpm)
P64	G20: 4700 (rpm)	LPG: 4100 (rpm)
P65	G20: 1240 (rpm)	LPG: 1140 (rpm)
P50	36 %	36%

Victrix Zeus Superior 32 2 ErP		
P62	G20: 4700 (rpm)	LPG: 4200(rpm)
P63	G20: 1380 (rpm)	LPG: 1280 (rpm)
P64	G20: 4700 (rpm)	LPG: 4200 (rpm)
P65	G20: 1380 (rpm)	LPG: 1280 (rpm)
P50	36 %	36%

Gas Valve 848

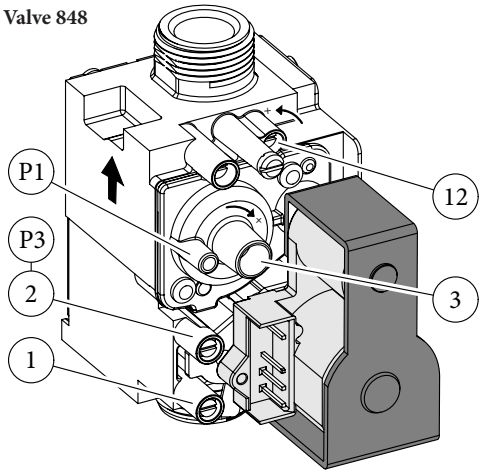

Key:
1 - Gas valve inlet pressure point
2 - Gas valve outlet pressure point
3 - Off/Set adjustment screw
12 - Outlet gas flow rate regulator

3-3

P.C.B.

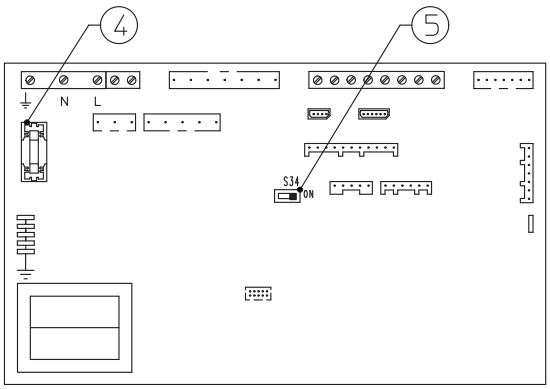

Key:
4 - Fuse 3.15 AF
5 - S34 Selector:
On = external probe;
Off = system supervisor

3-4

3.6 ADJUSTMENT OF THE AIR-GAS RATIO.

Attention: the CO_2 verification operations must be carried out with the casing mounted, while the gas valve calibration operations must be carried out with the casing open and disconnecting the boiler from the power supply.

Calibration of the minimum CO_2 (minimum heating power).
Enter the chimney sweep phase without withdrawing domestic hot water and take the selector switches to minimum (turn them in an anti-clockwise direction until "0" is seen on the display). To have an exact value of CO_2 in the flue gas the technician must insert the sampling probe to the bottom of the sample point, then check that the CO_2 value is that specified in the table, otherwise adjust the screw (3 Fig. 3-3) (Off-Set adjuster). To increase the CO_2 value, turn the adjustment screw (3) in a clockwise direction and vice versa to decrease it.

Calibration of the maximum CO_2 (nominal central heating power).
On completion of the adjustment of the minimum CO_2 keeping the chimney sweep function active, take the heating selector switch to maximum (turn it in a clockwise direction until "99" is seen on the display). To have an exact value of CO_2 in the flue gas the technician must insert the sampling probe to the bottom of the sample point, then check that the CO_2 value is that specified in the table, otherwise adjust the screw (12 Fig. 3-3) (gas flow rate regulator).
To increase the CO_2 value, turn the adjustment screw (12) in an anti-clockwise direction and vice versa to decrease it.

At every adjustment variation on the screw 12 it is necessary to wait for the boiler to stabilise itself at the value set (about 30 sec.).

Victrix Zeus Superior 26 2 ErP		
	CO_2 at nominal output (central heating)	CO_2 at minimum output (central heating)
G 20	9.40% ± 0.2	8.90% ± 0.2
G 30	12.10% ± 0.2	11.80% ± 0.2
G 31	10.70% ± 0.2	10.20% ± 0.2

Victrix Zeus Superior 32 2 ErP		
	CO_2 at nominal output (central heating)	CO_2 at minimum output (central heating)
G 20	9.40% ± 0.2	8.90% ± 0.2
G 30	12.30% ± 0.2	11.90% ± 0.2
G 31	10.50% ± 0.2	10.30% ± 0.2

3.7 CHECKS FOLLOWING CONVERSION TO ANOTHER TYPE OF GAS.

After making sure that conversion was carried out with a nozzle of suitable diameter for the type of gas used and the settings are made at the correct pressure, check that the burner flame is not too high or low and is stable (does not detach from burner);

N.B.: all boiler adjustment operations must be carried out by a qualified company (e.g. Authorised After-Sales Assistance).

3.8 PROGRAMMING THE P.C.B.

The boiler is prepared for possible programming of several operation parameters. By modifying these parameters as described below, the boiler can be adapted according to specific needs.

Attention: If the Italian language is to be restored (A1), see the indications described in Par. 2.7 (customisations menu "M3").

By pressing the button "D" it is possible to access the main menu, divided into three main parts:

- Information"M1" (See "User" Chapter)
- customisations "M3" (See "User" Chapter)
- "M5" configurations, menu reserved for the technician and for which a password is required.

To access programming, press button "D", turn the heating temperature selector switch (3) and scroll through the menu items until reaching "M5", press button "D", enter the password and set the parameters according to requirements.

Listed below are the items in the"M5" menu with default parameters and possible options indicated.

By turning the central heating temperature selector switch (3) scroll through the menu items. By pressing button "D" access the various levels of the menu and the choice of parameters is confirmed. Press button "C" to go back one level.

(The first item of the various options that appears inside the parameter is that selected by default).

M5 menu (password must be entered)					
1st Level	2nd Level	Options	Description	Default value	Value set by the technician
P50		25 ÷ 50	Set the boiler power in the ignition stage. The value is in percentage with respect to parameter P62	(See par. 3.5)	
P53		P53 1	Identifies the power of the boiler on which the P.C.B. is installed P53 1 = Not used P53 2 = 26 kW P53 3 = 32 kW	Equal to boiler power	Equal to boiler power
		P53 2			
		P53 3			
P54		P54. 1	Displays the temperature read on the domestic hot water probe on entry to the boiler	-	-
		P54.2	Displays the temperature read on the domestic hot water probe on exit from the boiler	-	-
		P54.3	Displays the temperature read on the return probe	-	-
		P54.4	Not used on this boiler model	-	-
P55			Displays the central heating flow temperature at which the boiler functions, calculated by the controls active on the system heat adjustment	-	-
SERVICE	P57	AUTO	- DELTA T = 0:proportional head (see parag. 1.24) - DELTA T = 5 ÷ 25 K: constant ΔT (see par. 1.24) **Note:** after selecting DELTA T adequate to the requirements, maximum (Vmax) and minimum (Vmin) circulating pump speed may be selected (adjustable from 100% to 65%).	AUTO 15	
		FIX	Fixed circulator pump speed (adjustable between 100% and 65%)		
	P62	4000 ÷ 5900	Set the maximum output depending on the domestic hot water, setting the speed of the fan (in RPM)	(See par. 3.5)	
	P63	900 ÷ 1500	Set the minimum output depending on the domestic hot water, setting the speed of the fan (in RPM)	(See par. 3.5)	
	P64	≤ P62	Set the maximum output depending on room heating. The value must be less than or equal to P62	(See par. 3.5)	
	P65	≥ P63	Set the minimum output according to room heating. The value must be greater than or equal to P63	(See par. 3.5)	
	P66	P66/A	Without the external probe (optional) it defines the minimum flow temperature. With the external probe present it defines the minimum flow temperature corresponding to operation with maximum external temperature (see graph Fig. 1-7) (it can be set between 20°C and 50°C) **N.B.:** to continue one must confirm the parameter (press "D" or exit adjustment "P66" by pressing "C")	20°C	
		P66/B	Without the external probe (optional) it defines the maximum flow temperature. With the external probe present it defines the maximum flow temperature corresponding to operation with minimum external temperature (see graph Fig. 1-7) (it can be set between 50°C and 85°C) **N.B.:** to continue one must confirm the parameter (press "D" or exit adjustment "P66" by pressing "C")	85°C	

M5 menu (password must be entered)					
1st Level	2nd Level	Options	Description	Default value	Value set by the technician
SERVICE	P66	P66/C	With the external probe present it defines at which minimum external temperature the boiler must operate at the maximum flow temperature (see graph Fig. 1-8) (can be set between -20°C and 0°C) **N.B.:** to continue one must confirm the parameter (press "D" or exit adjustment "P66" by pressing "C")	-5°C	
		P66/D	With the external probe present it defines at which maximum external temperature the boiler must operate at the minimum flow temperature (see graph Fig. 1-8) (can be set between 5°C and +25°C) **N.B.:** to continue one must confirm the parameter (press "D" or exit adjustment "P66" by pressing "C")	25°C	
	P67	P67.1	In winter mode the pump is always powered and so functions continuously	P67.2	
		P67.2	In winter mode the pump is managed by the room thermostat or by the remote control		
		P67.3	In winter mode the pump is managed by the room thermostat or by the remote control and by the boiler flow probe		
	P68	0s ÷ 500s	The boiler is set to ignite the burner immediately after a request for central heating. In the case of particular systems (e.g. area systems with motorised thermostatic valves etc.) it could be necessary to delay switch-on	0 seconds	
	P69	0s ÷ 255s	The boiler has an electronic timing device that prevents the burner from igniting too often in the central heating phase.	180 seconds	
	P70	0s ÷ 840s	The boiler performs an ignition ramp to arrive from minimum power to nominal heat output.	180 seconds (3 minutes)	
	P71	P71.1 (-2°C)	Boiler ignition for heating the domestic hot water occurs when the water contained in the cylinder falls by 3°C with respect to the temperature set. Solar function deactivated	P71.1	
		P71.2 (-5°C)	Boiler ignition for heating the domestic hot water occurs when the water contained in the cylinder falls by 10°C with respect to the temperature set. Solar function active, if the input domestic hot water has a sufficient temperature the boiler does not switch on		
	P72	AUTO OFF 9L/M 12L/M 15L/M	This function does not affect the correct functioning of this boiler model.	AUTO	
	RELAY1 (optional)	RELE1-0	Relay 1 not used	RELE1-1	
		RELE1-1	In a system divided into zones, relay 1 controls the main zone		
		RELE1-2	The relay signals the intervention of a boiler block (Can be coupled to an external signalling device, not supplied)		
		RELE1-3	The relay signals that the boiler is on and in the heating stage (Can be coupled with an external circulator pump, not supplied)		
		RELE1-4	Controls the opening of an external gas valve in concomitance with an ignition request of the boiler burner		
		RELE1-5	In the event the boiler circulator pump is replaced with a traditional fixed speed circulator pump one must connect the new circulator pump to the relay board.		
	RELAY2 (optional)	RELE2-0	Relay 2 not used	RELE2-0	
		RELE2-1	In a system divided into zones, relay 2 controls the secondary zone		
		RELE2-2	The relay signals the intervention of boiler block (Can be coupled to an external signalling device, not supplied)		
		RELE2-3	The relay signals that the boiler is on and in the heating stage (Can be coupled with an external circulator pump, not supplied)		
		RELE2-4	Controls the opening of an external gas valve in conjunction with an ignition request of the boiler burner		
		RELE2-5	Function not available in this boiler model		
		RELE2-6	In the event the boiler circulator pump is replaced with a traditional fixed speed circulator pump one must connect the new circulator pump to the relay board.		

M5 menu (password must be entered)					
1st Level	2nd Level	Options	Description	Default value	Value set by the technician
	RELAY3 (optional)	RELE3-0	Relay 3 not used	RELE3-0	
		RELE3-1	Check the storage tank recirculation pump (not used on this model)		
		RELE3-2	The relay signals the intervention of boiler block (Can be coupled to an external signalling device, not supplied)		
		RELE3-3	The relay signals that the boiler is on and in the heating stage (Can be coupled with an external circulator pump, not supplied)		
		RELE3-4	Controls the opening of an external gas valve in concomitance with an ignition request of the boiler burner		
		RELE3-5	Function not available in this boiler model		
		RELE3-6	In the event the boiler circulator pump is replaced with a traditional fixed speed circulator pump one must connect the new circulator pump to the relay board		
	P76	-15°C ÷ +14°C CE	With S34 = On. If the reading of the external probe is not correct it is possible to correct it in order to compensate any environmental factors With S34 = Off and system supervisor connected set the parameter to maximum until CE value is displayed	0°C	

3.9 "CHIMNEY SWEEP FUNCTION"
If this function is activated it takes boiler functioning to the adjustable power of the central heating selector switch.
In this state all adjustments are excluded and only the safety thermostat and the limit thermostat remain active. To activate the chimney sweep function press the Reset button "C" for 8 to 15 seconds in absence of domestic hot water and heating requests. Its activation is signalled by the relative symbol (22 Fig. 2-1). This function allows the technician to check the combustion parameters. After the checks deactivate the function, switching the boiler off and then on again using the Stand-by button.

3.10 PUMP ANTI-BLOCK FUNCTION.
The boiler has a function that starts the pump at least once every 24 hours for the duration of 30 seconds in order to reduce the risk of the pump becoming blocked due to prolonged inactivity.

3.11 THREE-WAY ANTI-BLOCK FUNCTION.
Both in "domestic hot water" and in "domestic hot water-central heating" phase the boiler is equipped with a function that starts the three-way motorised group 24 hours after it was last in operation, running it for a full cycle so as to reduce the risk of the three-way group becoming blocked due to prolonged inactivity.

3.12 RADIATORS ANTIFREEZE FUNCTION.
If the system return water is close to freezing, the boiler starts up until it reaches a safety temperature.

3.13 P.C.B. PERIODIC SELF-CHECK.
During functioning in central heating mode or with boiler in standby, the function activates every 18 hours after the last boiler check/power supply. In case of functioning in domestic hot water mode the self-check starts within 10 minutes after the end of the withdrawing in progress, for duration of approx. 10 seconds.

N.B.: during self-check, the boiler remains off.

3.14 AUTOMATIC VENT FUNCTION.
In the case of new central heating systems and in particular mode for floor systems, it is very important that dearation is performed correctly. To activate function "F8" press buttons "A and B" at the same time (Fig. 2-1) for 5 seconds with the boiler in stand-by. The function consists of the cyclic activation of the pump (100 s ON, 20 s OFF) and the 3-way valve (120 s domestic hot water, 120 s central heating). The function ends after 18 hours or by switching the boiler on using the ignition button "⏻".

3.15 SOLAR PANELS COUPLING FUNCTION.
The boiler is set-up to receive pre-heated water from a solar panels system up to a maximum temperature of 65 °C. If used with greater temperatures, it is recommended to install a mixing valve on the hydraulic circuit upstream of the boiler. Set the "P71" function on "P71.1" (Par. 3.8).
When the boiler inlet water is at a temperature that is equal or greater than that set by the domestic hot water selector switch "SET", the boiler does not switch on.

3.16 APPLIANCE CHECK AND MAINTENANCE.

The following checks and maintenance should be performed at least once a year.

- Clean the flue side of the heat exchanger.
- Clean the main burner.
- If deposits are detected in the combustion chamber one must remove them and clean the heat exchanger coils using nylon or sorghum brushes; it is forbidden to use brushes made of metal or other materials that may damage the combustion chamber itself.
- Check the integrity of the insulating panels inside the combustion chamber and if damaged replace them.
- Visually check for water leaks or oxidation from/on fittings and traces of condensate residues inside the sealed chamber.
- Check contents of the condensate drain trap.
- Via the condensate drain cap check that there are no residues of material that clog condensate passage; also check that the entire condensate drain circuit is clear and efficient.

  In the event of obstructions (dirt, sediment, etc.) with consequent leakage of condensate in the combustion chamber, one must replace the insulating panels.
- Check that the burner seal gaskets and the lid are intact and perfectly efficient, otherwise replace them. In any case the gaskets must be replaced at least every two years, regardless of their state of wear.
- Check that the burner is intact, that it has no deformations or cuts and that it is properly fixed to the combustion chamber lid; otherwise it must be replaced.
- Visually check that the water safety drain valve is not clogged.
- Check that, after discharging system pressure and bringing it to zero (read on boiler pressure gauge), the expansion vessel pressure is at 1.0 bar.
- Check that the system static pressure (with system cold and after refilling the system by means of the filling valve) is between 1 and 1.2 bar.
- Visually check that the safety and control devices have not been tampered with and/or shorted, in particular:
  - temperature safety thermostat;
- Check the integrity of the storage tank Magnesium Anode.
- Check the condition and integrity of the electrical system and in particular:
  - supply voltage cables must be inside the fairleads;
  - there must be no traces of blackening or burning.
- Check ignition and operation.
- Check correct calibration of the burner in domestic hot water and central heating phases.
- Check the operation of the appliance control and adjustment devices and in particular:
  - intervention of the main electrical switch on the boiler;
  - system regulation probes intervention;
  - domestic hot water control thermostat intervention.
- Check sealing efficiency of the gas circuit and the internal system.
- Check the intervention of the device against no gas ionisation flame control. The relative intervention time must be less than 10 seconds.

N.B.: in addition to yearly maintenance, one must also check the thermal system, with frequency and procedures that comply with the indications of the technical regulations in force.

3.17 CASING REMOVAL.

To facilitate boiler maintenance the casing can be completely removed by following these simple instructions (Fig. 3-5):

- Remove the lower grid (1) by taking out the 4 fastening screws (2).
- Open the control panel door (3) remove the 2 white screw caps (4) and take out the 2 fastening screws (5), tilt the panel towards you.
- Unscrew the 2 (6) fastening screws of the casing front (7) and release it by pushing it up.
- Loosen the screws (8) in the lower part of the casing, loosen the 2 screws (9) of the 2 casing sides (10) and unhook them from the slots (11) present on the rear of the casing side.

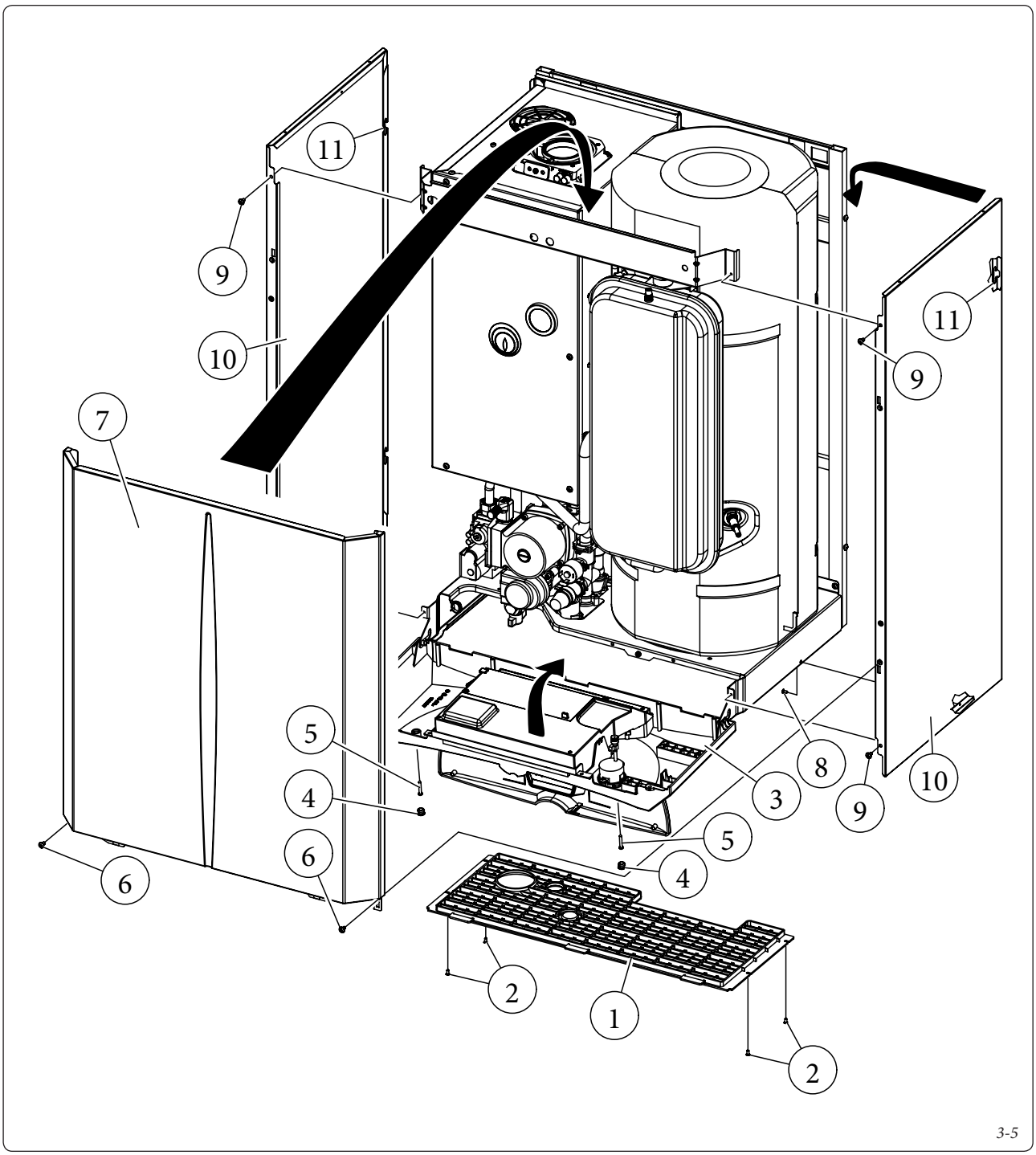

3-5

3.18 VARIABLE HEAT OUTPUT.

N.B.: the pressures indicated in the table represent the differences of pressures at the ends of the Venturi mixer and can be measured from the pressure points in the upper part of the sealed chamber (see pressure test 18 and 20 Fig. 1-29). The adjustments must be made with a digital differential pressure gauge with scale in tenths of a mm or Pascal. The power data in the table has been obtained with an intake-exhaust pipe measuring 0.5 m in length. Gas flow rates refer to the lower calorific value at a temperature of 15°C and at a pressure of 1013 mbar. The burner pressure values refer to the use of gas at a temperature of 15°C.

Victrix Zeus Superior 26 2 ErP.

			METHANE (G20)			BUTANE (G30)			PROPANE (G31)		
THERMAL POWER	THERMAL POWER		BURNER GAS FLOW RATE	PRESS. BURNER NOZZLES		BURNER GAS FLOW RATE	PRESS. BURNER NOZZLES		BURNER GAS FLOW RATE	PRESS. BURNER NOZZLES	
(kW)	(kcal/h)		(m^3/h)	(mbar)	(mm H_2O)	(kg/h)	(mbar)	(mm H_2O)	(kg/h)	(mbar)	(mm H_2O)
25,8	22188	D.H.W.	2,85	5,00	51,0	2,12	5,50	56,1	2,09	6,50	66,3
25,0	21500		2,75	4,70	47,9	2,06	5,15	52,5	2,02	6,12	62,4
24,0	20640		2,64	4,33	44,2	1,97	4,73	48,3	1,94	5,67	57,8
23,9	20554		2,63	4,30	43,8	1,96	4,69	47,9	1,93	5,62	57,4
22,0	18920		2,41	3,66	37,4	1,80	3,62	40,5	1,77	4,83	49,2
21,0	18060	CEN. HEAT. + D.H.W.	2,30	3,35	34,2	1,72	3,29	36,9	1,69	4,44	45,3
20,0	17200		2,19	3,06	31,2	1,63	2,13	33,5	1,61	4,07	41,5
19,5	16779		2,13	2,92	29,8	1,59	2,68	31,9	1,57	3,90	39,7
18,0	15480		1,97	2,52	25,7	1,47	2,40	27,3	1,44	3,38	34,5
17,0	14620		1,86	2,27	23,1	1,39	2,14	24,5	1,37	3,07	31,3
16,0	13760		1,75	2,03	20,7	1,31	1,90	21,8	1,29	2,77	28,2
15,0	12900		1,64	1,81	18,4	1,23	1,67	19,4	1,21	2,48	25,3
14,0	12040		1,54	1,60	16,3	1,15	1,27	17,0	1,13	2,21	22,6
13,0	11180		1,43	1,40	14,3	1,07	1,46	14,9	1,05	1,96	20,0
12,0	10320		1,32	1,21	12,4	0,99	1,27	12,9	0,97	1,72	17,5
11,0	9460		1,22	1,04	10,6	0,91	1,09	11,1	0,89	1,49	15,2
10,0	8600		1,11	0,88	9,0	0,83	0,92	9,4	0,81	1,28	13,1
9,0	7740		1,00	0,73	7,4	0,75	0,77	7,9	0,73	1,09	11,1
8,0	6880		0,89	0,59	6,0	0,67	0,64	6,5	0,66	0,90	9,2
7,0	6020		0,78	0,46	4,7	0,59	0,52	5,3	0,58	0,73	7,5
6,0	5160		0,67	0,35	3,6	0,50	0,41	4,2	0,50	0,58	5,9
5,0	4300		0,57	0,25	2,5	0,42	0,32	3,3	0,41	0,44	4,5
4,7	4042		0,53	0,22	2,2	0,40	0,30	3,1	0,39	0,40	4,1

Victrix Zeus Superior 32 2 ErP.

		METHANE (G20)			BUTANE (G30)			PROPANE (G31)		
THERMAL POWER	THERMAL POWER	BURNER GAS FLOW RATE	PRESS. BURNER NOZZLES		BURNER GAS FLOW RATE	PRESS. BURNER NOZZLES		BURNER GAS FLOW RATE	PRESS. BURNER NOZZLES	
(kW)	(kcal/h)	(m^3/h)	(mbar)	(mm H_2O)	(kg/h)	(mbar)	(mm H_2O)	(kg/h)	(mbar)	(mm H_2O)
32.0	27520	3.49	1.53	15.6	2.61	1.88	19.2	2.56	2.38	24.3
31.0	26660	3.38	1.44	14.7	2.52	1.76	17.9	2.48	2.20	22.4
30.0	25800	3.27	1.35	13.8	2.44	1.64	16.7	2.40	2.03	20.7
29.0	24940	3.16	1.27	12.9	2.36	1.53	15.6	2.32	1.87	19.1
28.0	24053	3.05	1.18	12.0	2.28	1.42	14.5	2.24	1.71	17.5
27.0	23220	2.94	1.10	11.2	2.20	1.32	13.4	2.16	1.57	16.0
26.0	22360	2.83	1.03	10.5	2.12	1.22	12.4	2.08	1.43	14.6
25.0	21500	2.73	0.95	9.7	2.03	1.13	11.5	2.00	1.30	13.3
24.0	20640	2.62	0.88	9.0	1.95	1.04	10.6	1.92	1.18	12.0
23.0	19780	2.51	0.81	8.3	1.87	0.95	9.7	1.84	1.07	10.9
22.0	18920	2.40	0.75	7.6	1.79	0.87	8.9	1.76	0.96	9.8
21.0	18060	2.29	0.69	7.0	1.71	0.79	8.1	1.68	0.86	8.8
20.0	17200	2.19	0.63	6.4	1.63	0.72	7.4	1.61	0.76	7.8
19.0	16340	2.08	0.57	5.8	1.55	0.65	6.7	1.53	0.68	6.9
18.0	15480	1.97	0.52	5.3	1.47	0.59	6.0	1.45	0.60	6.1
17.0	14620	1.87	0.47	4.8	1.39	0.53	5.4	1.37	0.53	5.4
16.0	13760	1.76	0.42	4.3	1.31	0.47	4.8	1.29	0.46	4.7
15.0	12900	1.65	0.37	3.8	1.23	0.42	4.3	1.21	0.40	4.1
14.0	12040	1.54	0.33	3.4	1.15	0.37	3.8	1.13	0.35	3.6
13.0	11180	1.44	0.29	2.9	1.07	0.33	3.4	1.05	0.31	3.1
12.0	10320	1.33	0.25	2.6	0.99	0.29	3.0	0.97	0.27	2.8
11.0	9460	1.22	0.22	2.2	0.91	0.25	2.6	0.90	0.24	2.4
10.0	8600	1.11	0.18	1.9	0.83	0.22	2.3	0.82	0.22	2.2
9.0	7740	1.00	0.15	1.6	0.75	0.19	2.0	0.74	0.20	2.0
8.0	6880	0.89	0.13	1.3	0.67	0.17	1.7	0.66	0.19	2.0
7.0	6020	0.78	0.10	1.0	0.58	0.15	1.5	0.58	0.19	1.9
6.9	5934	0.77	0.10	1.0	0.58	0.15	1.5	0.57	0.19	1.9

3.19 COMBUSTION PARAMETERS.

		G20	G30	G31
Supply pressure	mbar (mm H_2O)	20 (204)	29 (296)	37 (377)
Victrix Zeus Superior 26 2 ErP				
Gas nozzle diameter	mm	5.70	4.10	4.10
Flue flow rate at nominal heat output	kg/h	43	39	43
Flue flow rate at min heat output	kg/h	8	7	8
CO_2 at Q. Nom./Min.	%	9.40 / 8.90	12.00 / 11.80	10.60 / 10.20
CO with 0% O_2 at Nom./Min. Q. Nom./Min.	ppm	200 / 7	670 / 11	270 / 7
NO_X at 0% of O_2 at Q. Nom./Min.	mg/kWh	39 / 22	108 / 50	43 / 30
Flue temperature at nominal output	°C	78	86	79
Flue temperature at minimum output	°C	73	82	75
Victrix Zeus Superior 32 2 ErP				
Gas nozzle diameter	mm	WITHOUT	6.00	6.00
Flue flow rate at nominal heat output	kg/h	52	47	53
Flue flow rate at min heat output	kg/h	12	11	12
CO_2 at Q. Nom./Min.	%	9.40 / 8.90	12.30 / 11.90	10.50 / 10.30
CO with 0% O_2 at Nom./Min. Q. Nom./Min.	ppm	206 / 9	640 / 8	190 / 8
NO_X at 0% of O_2 at Q. Nom./Min.	mg/kWh	47 / 24	158 / 51	57 / 30
Flue temperature at nominal output	°C	73	82	74
Flue temperature at minimum output	°C	64	72	66

Combustion parameters: measuring conditions of useful efficiency (flow temperature/return temperature= 80 / 60 °C), ambient temperature reference = 15°C.

3.20 TECHNICAL DATA.

		Victrix Zeus Superior 26 2 ErP	Victrix Zeus Superior 32 2 ErP
Domestic hot water nominal heat input	kW (kcal/h)	26,9 (23137)	33.0 (28392)
Central heating nominal heat input	kW (kcal/h)	21,7 (18678)	33.0 (28392)
Minimum heat input	kW (kcal/h)	5,0 (4323)	7.3 (6279)
Domestic hot water nominal heat output (useful)	kW (kcal/h)	25,8 (22188)	32.0 (27520)
Central heating nominal heat output (useful)	kW (kcal/h)	21,0 (18060)	32.0 (27520)
Minimum heat output (useful)	kW (kcal/h)	4,7 (4042)	6.9 (5934)
*Effective thermal efficiency 80/60 Nom./Min.	%	96,7 / 93,5	96.9 / 94.5
*Effective thermal efficiency 50/30 Nom./Min.	%	104,3 / 106,0	104.7 / 105.8
*Effective thermal efficiency 40/30 Nom./Min.	%	106,5 / 106,5	107.3 / 107.3
Casing losses with burner On/Off (80-60°C)	%	0,70 / 1,00	0.87 / 0.20
Heat loss at flue with burner On/Off (80-60°C)	%	0,04 / 3,10	0.03 / 2.90
Central heating circuit max. operating pressure	bar	3	3
Maximum heating temperature	°C	90	90
Adjustable central heating temperature	°C	25 - 85	25 - 85
System expansion vessel total volume	l	7.1	7.1
Heating expansion vessel pre-charge	bar	1	1
Total volume domestic hot water expansion vessel	l	1.2	1.2
Domestic hot water expansion vessel pre-charge	bar	2.5	2.5
Appliance water content	l	6.7	9.1
Head available with 1000 l/h flow rate	kPa (m H_2O)	26.0 (2.65)	29.0 (2.95)
Hot water production useful heat output	kW (kcal/h)	25.8 (22188)	32.0 (27520)
Domestic hot water adjustable temperature	°C	10 - 60	10 - 60
Domestic hot water circuit min. pressure (dynamic)	bar	0.3	0.3
Domestic hot water circuit max. operating pressure	bar	8	8
Flow rate capacity in continuous duty (ΔT 30°C)	l/min	13.1	15.8
Domestic hot water performance classification according to N 13203-1	★★★		
Weight of full boiler	kg	76.8	81.9
Weight of empty boiler	kg	70.1	72.8
Electrical connection	V/Hz	230/50	230/50
Nominal absorption	A	0.64	0.75
Installed electric power	W	85	105
Pump absorbed power	W	45	59
EEI	-	≤ 0,20 - Part. 3	≤ 0,20 - Part. 3
Fan power absorbed power	W	29	30.5
Equipment electrical system protection	-	IPX5D	IPX5D
Max temperature of combustion products	°C	75	75
NO_x class	-	5	5
Weighted NO_x	mg/kWh	48	52
Weighted CO	mg/kWh	20	17
Type of appliance	C13 / C13x / C33 / C33x / C43 / C43x / C53 / C63 / C83 / C93 / C93x / B23p / B33 / B53p		
Category	II2H3B/P		

The data relevant to domestic hot water performance refer to a dynamic inlet pressure of 2 bar and an inlet temperature of 15°C; the values are measured directly at the boiler outlet considering that to obtain the data declared mixing with cold water is necessary.

- * Yields refer to the lower heating value.

INSTALLER

USER

MAINTENANCE TECHNICIAN

3.21 KEY FOR DATA NAMEPLATE.

Md		Cod. Md	
Sr N°	CHK	Cod. PIN	
Type			
Qnw/Qn min.	Qnw/Qn max.	Pn min.	Pn max.
PMS	PMW	D	TM
NOx Class			
			CONDENSING

N.B.: the technical data is provided on the data plate on the boiler

	IE
Md	Model
Cod. Md	Model code
Sr N°	Serial Number
CHK	Check
Cod. PIN	PIN code
Type	Type of installation (ref. CEN TR 1749)
Qnw min.	Minimum DHW heat input
Qn min.	CH minimum heat input
Qnw max.	DHW maximum heat input
Qn max.	CH maximum heat input
Pn min.	Minimum heat output
Pn max.	Maximum heat output
PMS	Maximum system pressure
PMW	Maximum domestic hot water pressure
D	Specific flow rate
TM	Maximum operating temperature
NOx Class	NOx Class
CONDENSING	Condensing boiler

3.22 TECHNICAL PARAMETERS FOR MIXED BOILERS (IN COMPLIANCE WITH REGULATION 813/2013).
The yields in the following tables refer to the higher heating value.

Model/s:			Victrix Zeus Superior 26 2 ErP				
Condensing Boilers:			SI				
Low temperature boiler:			NO				
Boiler type B1:			NO				
Co-generation appliance for central heating:			NO	Fitted with supplementary heating system:			NO
Mixed heating appliance:			SI				
Element	Symbol	Value	Unit	Element	Symbol	Value	Unit
Nominal heat output	P_n	21	kW	Seasonal energy efficiency of central heating	η_s	92	%
For central heating only and mixed boilers: useful heat output				For central heating only and mixed boilers: useful efficiency			
At nominal heat output in high temperature mode (*)	P_4	21.0	kW	At nominal heat output in high temperature mode (*)	η_4	87.0	%
At 30% of nominal heat output in a low temperature mode (**)	P_1	7.0	kW	At 30% of nominal heat output in a low temperature mode (**)	η_1	97.2	%
Auxiliary electricity consumption				Other items			
At full load	el_{max}	0.027	kW	Heat loss in standby	P_{stby}	0.104	kW
At partial load	el_{min}	0.014	kW	Ignition burner energy consumption	P_{ign}	0.000	kW
In standby mode	P_{SB}	0.005	kW	Emissions of nitrogen oxides	NO_X	44	mg / kWh
For mixed central heating appliances							
Stated load profile	XL			Domestic hot water production efficiency	η_{WH}	82	%
Daily electrical power consumption	Q_{elec}	0.193	kWh	Daily gas consumption	Q_{fuel}	23.816	kWh
Contact information	IMMERGAS S.p.A. VIA CISA LIGURE, 95 - 42041 BRESCELLO (RE) ITALY						

(*) High temperature mode means 60°C on return and 80°C on flow.
(**) Low temperature mode for condensation Boilers means 30°C , for low temperature boilers 37°C and for other appliances 50°C of return temperature.

Model/s:			Victrix Zeus Superior 32 2 ErP				
Condensing Boilers:			SI				
Low temperature boiler:			NO				
Boiler type B1:			NO				
Co-generation appliance for central heating:			NO	Fitted with supplementary heating system:			NO
Mixed heating appliance:			SI				
Element	Symbol	Value	Unit	Element	Symbol	Value	Unit
Nominal heat output	P_n	32	kW	Seasonal energy efficiency of central heating	η_s	92	%
For central heating only and mixed boilers: useful heat output				For central heating only and mixed boilers: useful efficiency			
At nominal heat output in high temperature mode (*)	P_4	32.0	kW	At nominal heat output in high temperature mode (*)	η_4	87.2	%
At 30% of nominal heat output in a low temperature mode (**)	P_1	10.6	kW	At 30% of nominal heat output in a low temperature mode (**)	η_1	96.7	%
Auxiliary electricity consumption				Other items			
At full load	el_{max}	0.035	kW	Heat loss in standby	P_{stby}	0.145	kW
At partial load	el_{min}	0.016	kW	Ignition burner energy consumption	P_{ign}	0.000	kW
In standby mode	P_{SB}	0.005	kW	Emissions of nitrogen oxides	NO_X	47	mg / kWh
For mixed central heating appliances							
Stated load profile	XL			Domestic hot water production efficiency	η_{WH}	80	%
Daily electrical power consumption	Q_{elec}	0.227	kWh	Daily gas consumption	Q_{fuel}	24.691	kWh
Contact information	IMMERGAS S.p.A. VIA CISA LIGURE, 95 - 42041 BRESCELLO (RE) ITALY						

(*) High temperature mode means 60°C on return and 80°C on flow.
(**) Low temperature mode for condensation Boilers means 30°C , for low temperature boilers 37°C and for other appliances 50°C of return temperature.

3.23 PRODUCT DATA SHEET (IN COMPLIANCE WITH REGULATION 811/2013).

Victrix Zeus Superior 26 2 ErP

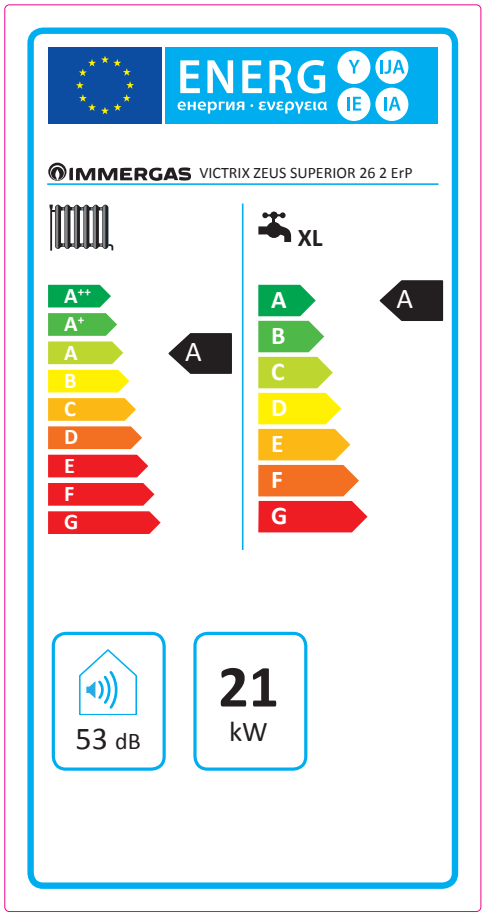

Parameter	value
Yearly energy consumption for the heating function (Q_{HE})	40.3 GJ
Yearly electricity consumption for the domestic hot water function (AEC)	42 kWh
Yearly fuel consumption for the domestic hot water function (AFC)	18 GJ
Seasonal room heating yield (η_s)	92 %
Domestic hot water production yield (η_{wh})	82 %

Victrix Zeus Superior 32 2 ErP

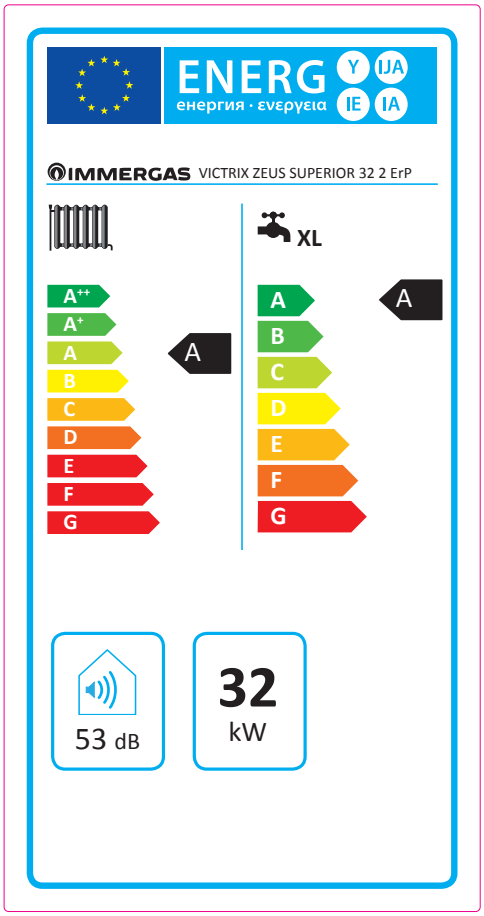

Parameter	value
Yearly energy consumption for the heating function (Q_{HE})	61.2 GJ
Yearly electricity consumption for the domestic hot water function (AEC)	50 kWh
Yearly fuel consumption for the domestic hot water function (AFC)	19 GJ
Seasonal room heating yield (η_s)	92 %
Domestic hot water production yield (η_{wh})	80 %

For proper installation of the appliance refer to chapter 1 of this booklet (for the installer) and current installation regulations. For proper maintenance refer to chapter 3 of this booklet (for the maintenance technician) and adhere to the frequencies and methods set out herein.

3.24 PARAMETERS FOR FILLING IN THE ASSEMBLY SHEET.

In case you should wish to install an assembly, starting from the Victrix Zeus Superior ErP boiler (26 2 or 32 2), use the assembly charts in fig. 3-8 and 3-11.

For correctly filling in, enter the figures shown in tables fig. 3-7 and 3-10 (as shown in the facsimile assembly sheet fig. 3-6 and 3-9) .

The remaining values must be obtained from the technical data sheets of the products used to make up the assembly (e.g. solar devices, integration heat pumps, temperature controllers).

Use sheet fig. 3-8 for "assemblies" related to the heating function (e.g.: boiler + temperature controller).

Use sheet fig. 3-11 for "assemblies" related to the domestic hot water function (e.g.: boiler + solar thermal system).

Facsimile for filling in room heating system assembly chart.

Seasonal space heating energy efficiency of boiler — 1 'I' %

Temperature control
From fiche of temperature control
Class I = 1 %, Class II = 2 %, Class III = 1.5 %, Class IV = 2 %, Class V = 3 %, Class VI = 4 %, Class VII = 3.5 %, Class VIII = 5 %
2 + [ ] %

Supplementary boiler
From fiche of boiler
Seasonal space heating energy efficiency (in %)
([ ] - 'I') x 0.1 = ± 3 [ ] %

Solar contribution
From fiche of solar device
Collector size (in m²) — Tank volume (in m³) — Collector efficiency (in %) — Tank rating A* = 0.95, A = 0.91, B = 0.86, C = 0.83, D-G = 0.81
('III' x [ ] + 'IV' x [ ]) x (0.9 x ([ ] / 100) x [ ] = + 4 [ ] %

Supplementary heat pump
From fiche of heat pump
Seasonal space heating energy efficiency (in %)
([ ] - 'I') x 'II' = + 5 [ ] %

Solar contribution and Supplementary heat pump
Select smaller value
0.5 x 4 [ ] OR 0.5 x 5 [ ] = - 6 [ ] %

Seasonal space heating energy efficiency of package — 7 [ ] %

Seasonal space heating energy efficiency class of package

G	F	E	D	C	B	A	A+	A++	A+++
< 30 %	≥ 30 %	≥ 34 %	≥ 36 %	≥ 75 %	≥ 82 %	≥ 90 %	≥ 98 %	≥ 125 %	≥ 150 %

Boiler and supplementary heat pump installed with low temperature heat emitters at 35°C?
From fiche of heat pump 7 [ ] + (50 x 'II') = [ ] %

The energy efficiency of the package of products provided far in this fiche may not correspond to its actual energy efficiency once installed in a building, as the efficiency is influenced by further factors such as heal loss in the distribution system and the dimensioning of the products in relation to building size and characteristics.

3-6

Parameters for filling in assembly chart.

Parameter	Victrix Zeus superior 26 2 ErP	Victrix Zeus superior 32 2 ErP
'I'	92	92
'II'	*	*
'III'	1,27	0.84
'IV'	0,50	0.33

* *to be established by means of table 5 of Regulation 811/2013 in case of "assembly" including a heat pump to integrate the boiler. In this case the boiler must be considered as the main appliance of the assembly.*

3-7

Room heating system assembly chart.

Seasonal space heating energy efficiency of boiler — 1 'I' %

Temperature control
From fiche of temperature control
Class I = 1 %, Class II = 2 %, Class III = 1.5 %, Class IV = 2 %, Class V = 3 %, Class VI = 4 %, Class VII = 3.5 %, Class VIII = 5 %
+ 2 %

Supplementary boiler
From fiche of boiler
Seasonal space heating energy efficiency (in %)
(☐ - 'I') x 0.1 = ± 3 %

Solar contribution
From fiche of solar device
Collector size (in m²) — Tank volume (in m³) — Collector efficiency (in %) — Tank rating A* = 0.95, A = 0.91, B = 0.86, C = 0.83, D-G = 0.81
('III' x ☐ + 'IV' x ☐) x (0.9 x (☐ / 100) x ☐ = + 4 %

Supplementary heat pump
From fiche of heat pump
Seasonal space heating energy efficiency (in %)
(☐ - 'I') x 'II' = + 5 %

Solar contribution and Supplementary heat pump
Select smaller value
0.5 x 4 ☐ OR 0.5 x 5 ☐ = - 6 %

Seasonal space heating energy efficiency of package — 7 %

Seasonal space heating energy efficiency class of package

G	F	E	D	C	B	A	A+	A++	A+++
< 30 %	≥ 30 %	≥ 34 %	≥ 36 %	≥ 75 %	≥ 82 %	≥ 90 %	≥ 98 %	≥ 125 %	≥ 150 %

Boiler and supplementary heat pump installed with low temperature heat emitters at 35°C?
From fiche of heat pump
7 ☐ + (50 x 'II') = ☐ %

The energy efficiency of the package of products provided far in this fiche may not correspond to its actual energy efficiency once installed in a building, as the efficiency is influenced by further factors such as heal loss in the distribution system and the dimensioning of the products in relation to building size and characteristics.

3-8

Facsimile for filling in domestic hot water production system assembly chart.

Water heating energy efficiency of combination heater ❶ ‘I’ %

Declared load profile: ☐

Solar contribution

From fiche of solar device

Auxiliary electricity

(1,1 x ‘I’ - 10 %) x ‘II’ - ‘III’ - ‘I’ = + ❷ %

Water heating energy efficiency of package under average climate ❸ %

Water heating energy efficiency class of package under average climate

	G	F	E	D	C	B	A	A+	A++	A+++
☐ M	< 27 %	≥ 27 %	≥ 30 %	≥ 33 %	≥ 36 %	≥ 39 %	≥ 65 %	≥ 100 %	≥ 130 %	≥ 163 %
☐ L	< 27 %	≥ 27 %	≥ 30 %	≥ 34 %	≥ 37 %	≥ 50 %	≥ 75 %	≥ 115 %	≥ 150 %	≥ 188 %
☐ XL	< 27 %	≥ 27 %	≥ 30 %	≥ 35 %	≥ 38 %	≥ 55 %	≥ 80 %	≥ 123 %	≥ 160 %	≥ 200 %
☐ XXL	< 28 %	≥ 28 %	≥ 32 %	≥ 36 %	≥ 40 %	≥ 60 %	≥ 85 %	≥ 131 %	≥ 170 %	≥ 213 %

Water heating energy efficiency under colder and warmer climate conditions

Colder: ❸ - 0.2 x ❷ = %

Warmer: ❸ + 0.4 x ❷ = %

The energy efficiency of the package of products provided far in this fiche may not correspond to its actual energy efficiency once installed in a building, as the efficiency is influenced by further factors such as heat loss in the distribution system and the dimensioning of the products in relation to building size and characteristics.

3-9

Parameters for filling in DHW package assembly chart.

Parameter	Victrix Zeus superior 26 2 ErP	Victrix Zeus superior 32 2 ErP
'I'	82	80
'II'	*	*
'III'	*	*

* *to be determined according to Regulation 811/2013 and transient calculation methods as per Notice of the European Community no. 207/2014.*

3-10

Domestic hot water production system assembly chart.

Water heating energy efficiency of combination heater ❶ ['I'] %

Declared load profile: [ ]

Solar contribution

From fiche of solar device

(1,1 x 'I' - 10 %) x 'II' - ['III'] - 'I' = ❷ + [ ] %

Auxiliary electricity

Water heating energy efficiency of package under average climate ❸ [ ] %

Water heating energy efficiency class of package under average climate

	G	F	E	D	C	B	A	A+	A++	A+++
M	< 27 %	≥ 27 %	≥ 30 %	≥ 33 %	≥ 36 %	≥ 39 %	≥ 65 %	≥ 100 %	≥ 130 %	≥ 163 %
L	< 27 %	≥ 27 %	≥ 30 %	≥ 34 %	≥ 37 %	≥ 50 %	≥ 75 %	≥ 115 %	≥ 150 %	≥ 188 %
XL	< 27 %	≥ 27 %	≥ 30 %	≥ 35 %	≥ 38 %	≥ 55 %	≥ 80 %	≥ 123 %	≥ 160 %	≥ 200 %
XXL	< 28 %	≥ 28 %	≥ 32 %	≥ 36 %	≥ 40 %	≥ 60 %	≥ 85 %	≥ 131 %	≥ 170 %	≥ 213 %

Water heating energy efficiency under colder and warmer climate conditions

Colder: ❸ [ ] - 0.2 x ❷ [ ] = [ ] %

Warmer: ❸ [ ] + 0.4 x ❷ [ ] = [ ] %

The energy efficiency of the package of products provided far in this fiche may not correspond to its actual energy efficiency once installed in a building, as the efficiency is influenced by further factors such as heat loss in the distribution system and the dimensioning of the products in relation to building size and characteristics.

3-11

Follow us

Immergas Italia

immergas.com

Immergas S.p.A.
42041 Brescello (RE) - Italy
Tel. 0522.689011
Fax 0522.680617

Certified company ISO 9001

This instruction booklet is made of ecological paper Cod.1.037935ENG - rev. ST.001312/002 - 02/16 - Inglese per IRLANDA (IE)